#lightingstories

Pricelist 2024

Alle Preise zzgl. ges. MwSt.

prandina

LIGHTING STORIES

2024.00

SUMMARY

BILUNA…… 5
BLOOM ……7
CAPITAN DA MAR..8
CHAN…….. 10
CPL …….. 17
DIVER……...21
DOLOMITE…….. 26
EFFIMERA……...27
EQUILIBRE ……. 28
EXTRA ……32
FEZ……. 33
FINLAND……. 36
FLYER……. 37
GINGER ……...38
GLAM …….. 40
GONG ……. 42
GONG MINI…… 48
LANDING…… 55
LED MACHINE…... 57
LEMBO……... 58
LIN…… 60
LUISA……... 61
MICO…… 67
MINT …… 68
MOOD ……... 69
MOONLIGHT ……. 70
NOTTE …… 71
NOVIA ……. 76
OVER ……77
PARAPH ……..... 78
PLATONE…… 80
SANTACHIARA …. 81
SEGESTA…… 84
SERA …….. 85
SHUTTLE…….. 88
SINO…… 89
TECA …… 90
TEODORA ……..91
TEODORA GLASS. 93
THE PEKERMAN P.94
TIARA…… 95
TULIPA …… 97
VESTALE …… 98
ZERO …….. 99
ZERODIECI …….101

SPARE PARTS….. 102

CUSTOMS……111

This Pricelist

FAMILY NAME
DESIGNER, YEAR OF
PRODUCTION START

Zero

DESIGN BY
MENGOTTI/PRANDINA 1994

OTHER
VERSIONS

PRODUCT
NAME

ZERO S5/LED S5

CEILING ROSES' SIZES
FOR LED AND
DIMMABLE LED
VERSIONS

lateral ceiling
attachment available

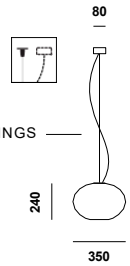

QUOTED DRAWINGS
(mm.)

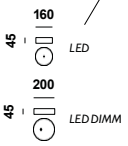

ADMITTED BULBS	MARKS	WEIGHTS, VOLUMES, N° OF BOXES		
LED E27 **LED 8,5W - 3000K (1044lm)**		**5,5**	**0,078**	

VERSIONS

AVAILABLE FINISHINGS AND COLORS	CODES	PRICES
E27 *glass diffuser*		***€ VAT EXCL.***
OPAL WHITE (quick shipment item)	1423002110101	**395,00**
LED – dimmable trailing edge *glass diffuser*		***€ VAT EXCL.***
OPAL WHITE	1643000710101	**670,00**
LED S5 DIMM (Dali/DSI - SwitchDIM - 1...10V - 0...10V) *glass diffuser*	dimmable version	***€ VAT EXCL.***
OPAL WHITE	1643001010101	**690,00**
LATERAL CEILING ATTACHMENT	6993601500100	**36,00**

MARKS & SYMBOLS

ALL LAMPS ARE LABELLED WITH THE MODEL IDENTIFICATION, VOLTAGE AND FREQUENCY, ISOLATION CLASS AND THE SPECIFIC BULB TYPE AND WATTAGE LIMIT. EACH LAMP IS SUPPLIED WITH AN INSTRUCTION CARD FOR ITS PROPER INSTALLATION AND USE.
IF THE LAMP IS IMPROPERLY INSTALLED OR USED, THE GUARANTEE IS VOID.

SUSPENSION
TABLE
FLOOR
WALL
CEILING

CLASS I. SINGLE ISOLATION: PROTECTIVE GROUNDING IS REQUIRED
CLASS II. DOUBLE ISOLATION: PROTECTIVE GROUNDING IS NOT REQUIRED
IP20 **PROTECTION LEVEL**
SUITABLE FOR MOUNTING ON NORMALLY INFLAMMABLE SURFACES
DIMMABLE LAMP

EUROPEAN COMMUNITY SAFETY AND TECHNICAL APPROVAL
FEEDING WIRE WORKING LENGHT

IMPORTANT!

- ALL SUSPENSION FIXTURES ARE SUPPLIED WITH NEW UNIVERSAL MATT WHITE CEILING ROSES.
- LATERAL KIT VERSIONS CAN BE SUPPLIED BY REQUESTING THE LATERAL CEILING ATTACHMENT SPECIFIED ON PRICE LIST.
- DOUBLE VERSIONS (PREVIOUSLY CALLED *S11* AND *S33*) CAN BE SUPPLIED BY REQUESTING N°2 LATERAL CEILING ATTACHMENT SPECIFIED ON PRICE LIST.
- IF NOT INDICATED, NO BULBS ARE SUPPLIED. PLEASE NOTE THAT IN CASE OF DIMMABLE VERSION, THE BULBS MUST BE DIMMABLE.

INFORMATIONS

PRANDINA WORKS TO KEEP THE HIGHEST POSSIBLE QUALITY OF ITS PRODUCTS BY USING QUALITY MATERIALS AND FINE WORKMANSHIP. IT IS IMPORTANT TO NOTE THAT SOME PIECES CAN VARY IN SHAPE AND COLOUR FROM ONE TO THE OTHER, AS THEY ARE HAND-BLOWN GLASS. THOSE DIFFERENCES ARE NOT IMPERFECTIONS; RATHER THEY GUARANTEE THAT THE GLASS IS HANDCRAFTED. PRANDINA IS CONSTANTLY WORKING TO IMPROVE ITS PRODUCTS AND IT RESERVES THE RIGHT TO MAKE MODIFICATIONS WITHOUT NOTICE. FOR FURTHER INFORMATION PLEASE CONTACT OUR PROJECT-OFFICE BY FAX OR E-MAIL (info@prandina.it). THIS PRICELIST REPLACES ALL PREVIOUS PRICELIST. **2024 EDITION.**

Your best lighting stories

Pricelist 2024

Please check the validity of prices with our customer care

BILUNA S5

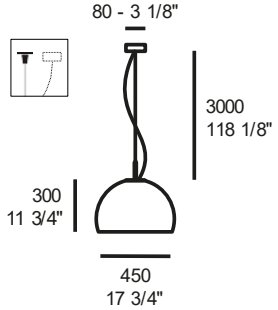

3xLED E27 | IP20 | Kg 5,4 | m³ 0,132

E27
painted metal shell + internal concave white methacrylate diffuser

		€ VATEXCL.
GLOSSY WHITE	1763001614500	**990,00**
GLOSSY BLACK	1763001614600	**990,00**
MATT SAND-BEIGE	1763001614400	**990,00**
MATT BLACK	1763001613500	**990,00**

LATERAL CEILING ATTACHMENT	6993601500100	**39,60**

BILUNA S7

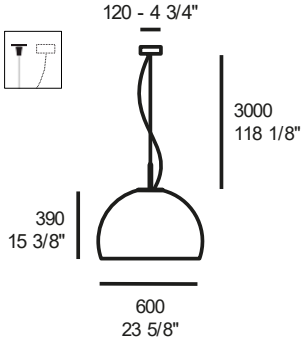

LED 30W - 3000K (3200lm) | IP20 | Dimmable | Kg 13,9 | m³ 0,312

LED – dimmable trailing edge
painted polypropylene shell + internal concave white methacrylate diffuser

	Dimmable	€ VATEXCL.
GLOSSY WHITE	1764000114500	**1450,00**
GLOSSY BLACK	1764000114600	**1450,00**
MATT SAND-BEIGE	1764000114400	**1450,00**
MATT BLACK	1764000113500	**1450,00**

LATERAL CEILING ATTACHMENT	6993601600100	**58,30**

DALI DIMMABLE LED VERSION AVAILABLE ON REQUEST **+98,00**

BILUNA F5

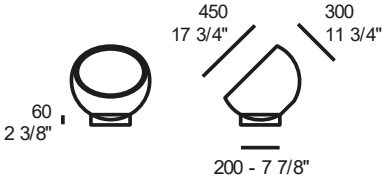

3xLED E27

5,0 0,132

mm 2700

painted metal shell + internal concave white methacrylate diffuser, dimmer on cable ***€ VAT EXCL.***

GLOSSY WHITE - white fabric cable	1762000714500	**990,00**
GLOSSY BLACK - black fabric cable	1762000714600	**990,00**
MATT SAND-BEIGE - black fabric cable	1762000714400	**990,00**
MATT BLACK - black fabric cable	1762000713500	**990,00**

BILUNA F7

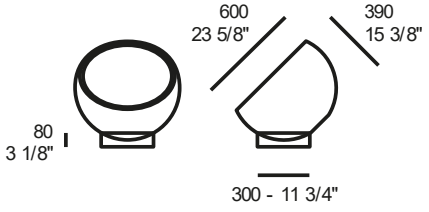

LED 30W - 3000K (3200lm)

14,4 0,312

mm 2500

LED
painted polypropylene shell + internal concave white methacrylate diffuser
Dimmer on cable

€ VAT EXCL.

GLOSSY WHITE - white fabric cable	1764001114500	**1450,00**
GLOSSY BLACK - black fabric cable	1764001114600	**1450,00**
MATT SAND-BEIGE - black fabric cable	1764001114400	**1450,00**
MATT BLACK - black fabric cable	1764001113500	**1450,00**

BLOOM S5

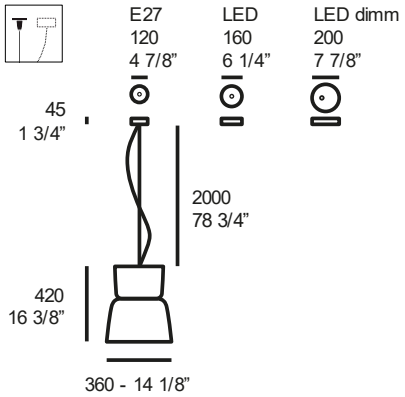

LED E27 + MAX 2x6W LED G9
LED 19,2W - 3000K (2100lm)

Kg 8,9 | m³ 0,161 | I

E27+G9 suitable for SEPARATE SWITCHING ON
two glass diffusers

		€ VATEXCL.
OPAL WHITE	1A43000613001	**990,00**
GLOSSY BLACK	1A43000613005	**990,00**
GLOSSY BLACK/COPPER	1A43000613075	**1090,00**

LED (NO SEPARATE SWITCHING ON) – dimmable trailing edge
two glass diffusers

		€ VATEXCL.
OPAL WHITE	1A43000413001	**1490,00**
GLOSSY BLACK	1A43000413005	**1490,00**
GLOSSY BLACK/COPPER	1A43000413075	**1590,00**

LED DIMM (Dali/DSI - SwitchDIM - 1...10V - 0...10V) (NO SEPARATE SWITCHING ON)
two glass diffusers

		€ VATEXCL.
OPAL WHITE	1A43000513001	**1590,00**
GLOSSY BLACK	1A43000513005	**1590,00**
GLOSSY BLACK/COPPER	1A43000513075	**1690,00**
LATERAL CEILING ATTACHMENT	6993601500100	**39,60**

BLOOM F5

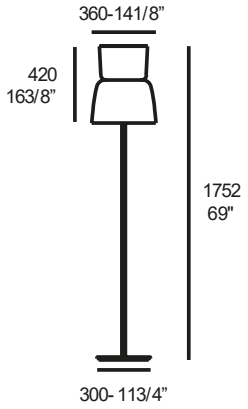

LED E27 + MAX 2x6W LED G9

Kg 25,0 | m³ 0,41 | 2

E27+G9
two glass diffusers, matt white metal structure, dimmer on black fabric cable

glass diffuser

		€ VATEXCL.
OPAL WHITE	1A43002113001	1550,00

CAPITAN DA MAR S1

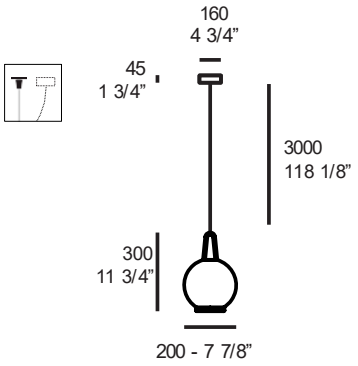

LED 10W (5W UP / 5W DOWN) - 3000K (1440lm)

2,5 0,05

2700K available with a surcharge of 3%

S1 – dimmable trailing edge

clear crystal diffuser, painted or galvanized metal structure

		€ VATEXCL.
MATT WHITE	1D09200113000	**465,00**
MATT BLACK	1D09200113500	**465,00**
MATT LAGOON	1D09200115500	**465,00**
LUXURY GOLD	1D09200110500	**485,00**
LATERAL CEILING ATTACHMENT	6993601500100	**39,60**

CAPITAN DA MAR S3

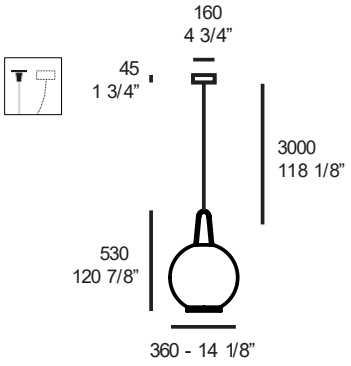

LED 20W (10W UP / 10W DOWN) - 3000K (3200lm)

4,2 0,15

2700K available with a surcharge of 3%

S3 – dimmable trailing edge

clear crystal diffuser, painted or galvanized metal structure

		€ VATEXCL.
MATT WHITE	1D09200313000	**745,00**
MATT BLACK	1D09200313500	**745,00**
MATT LAGOON	1D09200315500	**745,00**
LUXURY GOLD	1D09200310500	**765,00**
LATERAL CEILING ATTACHMENT	6993601500100	**39,60**

CAPITAN DA MAR T1

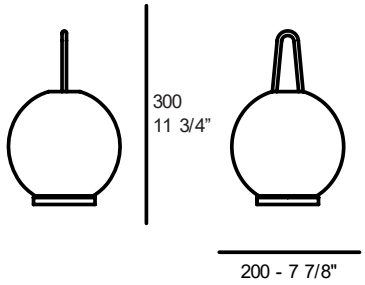

LED 5W - 3000K (720lm)

Kg 2,2 | m³ 0,05 | I

mm 2500

2700K available with a surcharge of 3%

T1 – dimmable

clear crystal diffuser, painted or galvanized metal structure, dimmer on fabric cable

		€ VATEXCL.
MATT WHITE WITH WHITE FABRIC CABLE	1D09100113000	**325,00**
MATT BLACK WITH BLACK FABRIC CABLE	1D09100113500	**325,00**
MATT LAGOON WITH WHITE FABRIC CABLE	1D09100115500	**325,00**
LUXURY GOLD WITH BLACK FABRIC CABLE	1D09100110500	**335,00**

CAPITAN DA MAR T3

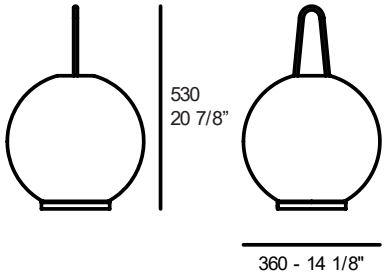

LED 10W - 3000K (1600lm)

Kg 4,0 | m³ 0,15 | I

mm 2500

2700K available with a surcharge of 3%

T3 – dimmable

clear crystal diffuser, painted or galvanized metal structure, dimmer on fabric cable

		€ VATEXCL.
MATT WHITE WITH WHITE FABRIC CABLE	1D09100313000	**575,00**
MATT BLACK WITH BLACK FABRIC CABLE	1D09100313500	**575,00**
MATT LAGOON WITH WHITE FABRIC CABLE	1D09100315500	**575,00**
LUXURY GOLD WITH BLACK FABRIC CABLE	1D09100310500	**595,00**

CHAN AR6

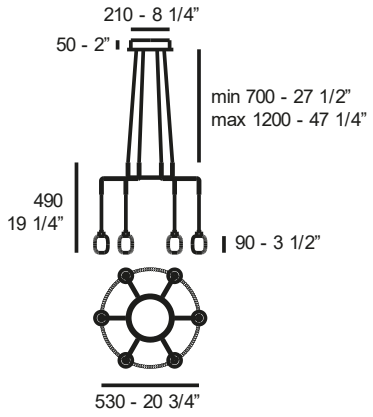

MAX 6x20W HSGT G4

IP20 Dimmable

Kg 8,3 m³ 0,228 2

Pyrex glass diffuser	*white painted steel*	***€ VATEXCL.***	*brass galvanized steel*	***€ VATEXCL.***
WHITE	1C03000314501	**1685,00**	1C03000311201	**1795,00**
WHITE PAINTED STEEL RING		6101915603000		**49,50**

CHAN AT6

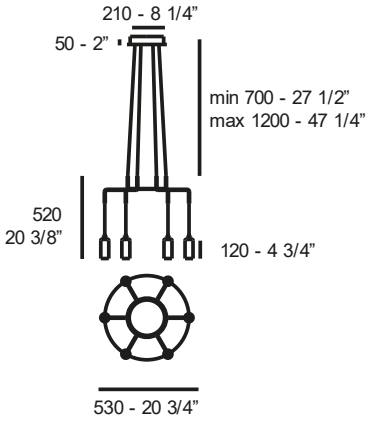

LED 6x4,2W - 2700K (1800lm)
Dimmable trailing edge

IP20 Dimmable

Kg 8,3 m³ 0,228 2

Pyrex glass diffuser	*white painted steel*	***€ VATEXCL.***	*brass galvanized steel*	***€ VATEXCL.***
WHITE	1C03000914501	**1718,00**	1C03000911201	**1828,00**
WHITE PAINTED STEEL RING		6101915603000		**49,50**

CHAN BR6

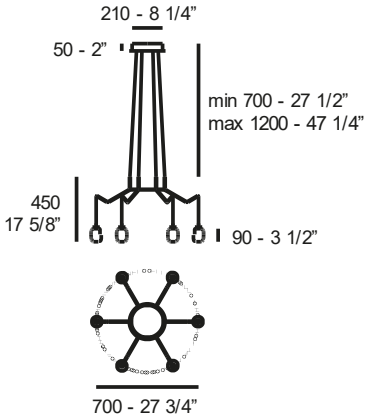

MAX 6x20W HSGT G4

Kg 8,3 | m³ 0,228 | 2

Pyrex glass diffuser	*white painted steel*	*€ VATEXCL.*	*brass galvanized steel*	*€ VATEXCL.*
WHITE	1C03000414501	**1685,00**	1C03000411201	**1795,00**
WHITE PAINTED STEEL RING		6101915603000		**49,50**

CHAN BT6

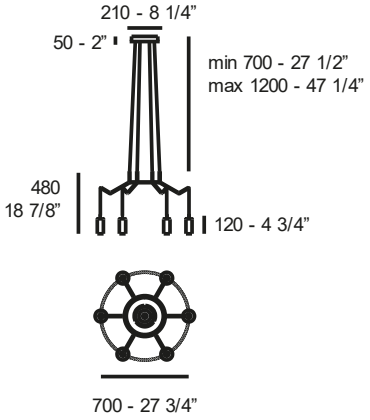

LED 6x4,2W - 2700K (1800lm)
Dimmable trailing edge

Kg 8,3 | m³ 0,228 | 2

Pyrex glass diffuser	*white painted steel*	*€ VATEXCL.*	*brass galvanized steel*	*€ VATEXCL.*
WHITE	1C03001014501	**1718,00**	1C03001011201	**1828,00**
WHITE PAINTED STEEL RING		6101915603000		**49,50**

CHAN AR6+AR3+R1

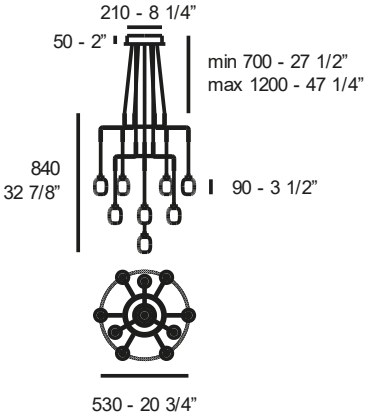

MAX 10x20W HSGT G4

Kg 11,3 | m³ 0,337 | 3

Pyrex glass diffuser	*white painted steel*	*€ VATEXCL.*	*brass galvanized steel*	*€ VATEXCL.*
WHITE	1C03001314501	**2504,50**	1C03001311201	**2614,50**
WHITE PAINTED STEEL RING		6101915603000		**49,50**

CHAN AT6+AT3+T1

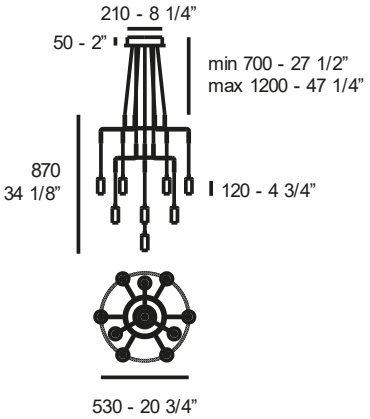

LED 10x4,2W - 2700K (3000lm)
Dimmable trailing edge

Kg 11,3 | m³ 0,337 | 3

Pyrex glass diffuser	*white painted steel*	*€ VATEXCL.*	*brass galvanized steel*	*€ VATEXCL.*
WHITE	1C03001614501	**2559,50**	1C03001611201	**2669,50**
WHITE PAINTED STEEL RING		6101915603000		**49,50**

CHAN BR6+AR3+R1

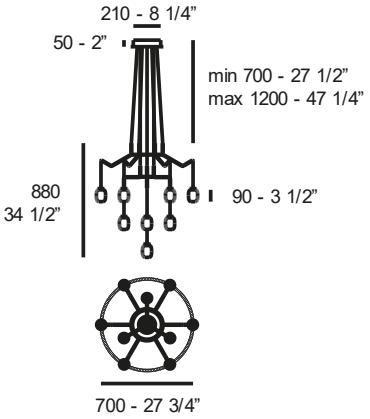

MAX 10x20W HSGT G4

Kg 11,3 | m³ 0,337 | 3

Pyrex glass diffuser	*white painted steel*	*€ VATEXCL.*	*brass galvanized steel*	*€ VATEXCL.*
WHITE	1C03001414501	**2504,50**	1C03001411201	**2614,50**
WHITE PAINTED STEEL RING		6101915603000		**49,50**

CHAN BR6+BR3+R1

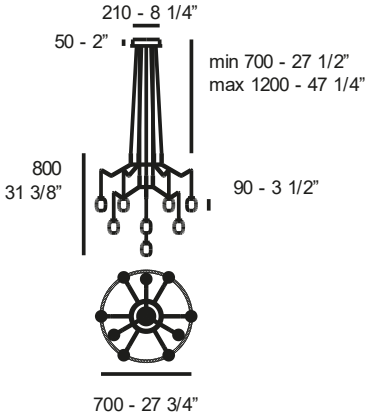

MAX 10x20W HSGT G4

Kg 11,3 | m³ 0,337 | 3

Pyrex glass diffuser	*white painted steel*	*€ VATEXCL.*	*brass galvanized steel*	*€ VATEXCL.*
WHITE	1C03001514501	**2504,50**	1C03001511201	**2614,50**
WHITE PAINTED STEEL RING		6101915603000		**49,50**

CHAN BT6+AT3+T1

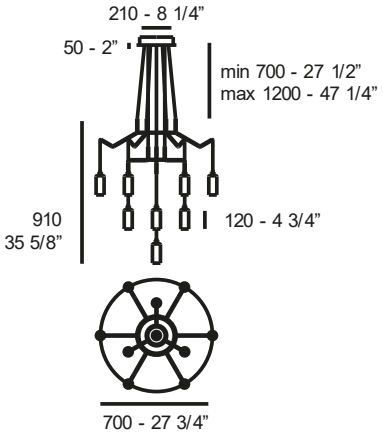

LED 10x4,2W - 2700K (3000lm)
Dimmable trailing edge

11,3 | 0,337 | 3

Pyrex glass diffuser	*white painted steel*	***€ VATEXCL.***	*brass galvanized steel*	***€ VATEXCL.***
WHITE	1C03001714501	**2559,50**	1C03001711201	**2669,50**
WHITE PAINTED STEEL RING		6101915603000		**49,50**

CHAN BT6+BT3+T1

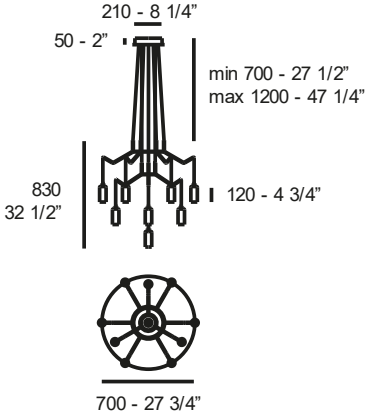

LED 10x4,2W - 2700K (3000lm)
Dimmable trailing edge

11,3 | 0,337 | 3

Pyrex glass diffuser	*white painted steel*	***€ VATEXCL.***	*brass galvanized steel*	***€ VATEXCL.***
WHITE	1C03001814501	**2559,50**	1C03001811201	**2669,50**
WHITE PAINTED STEEL RING		6101915603000		**49,50**

CHAN AR9

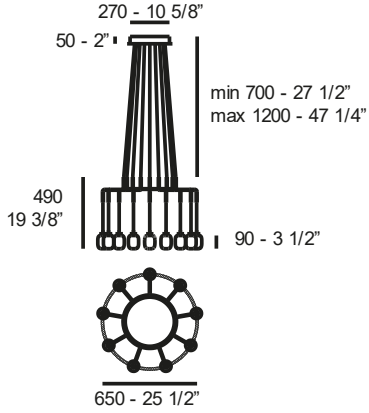

MAX 9x20W HSGT G4

11,5 | 0,293 | 2

Pyrex glass diffuser	*white painted steel*	***€ VATEXCL.***	*brass galvanized steel*	***€ VATEXCL.***
WHITE	1C03000514501	**2394,50**	1C03000511201	**2460,50**
WHITE PAINTED STEEL RING		6101915903000		**49,50**

CHAN AT9

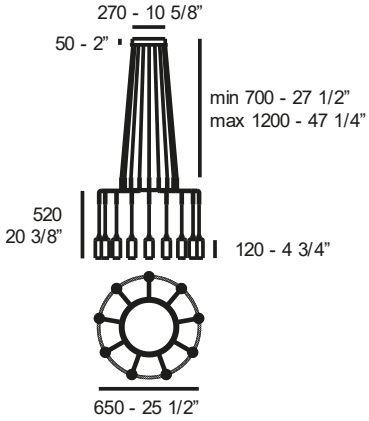

LED 9x4,2W - 2700K (2700lm)
Dimmable trailing edge

11,5 | 0,293 | 2

Pyrex glass diffuser	*white painted steel*	***€ VAT EXCL.***	*brass galvanized steel*	€ VAT EXCL.
WHITE	1C03001114501	**2444,00**	1C03001111201	**2510,00**
WHITE PAINTED STEEL RING		6101915903000		**49,50**

CHAN BR9

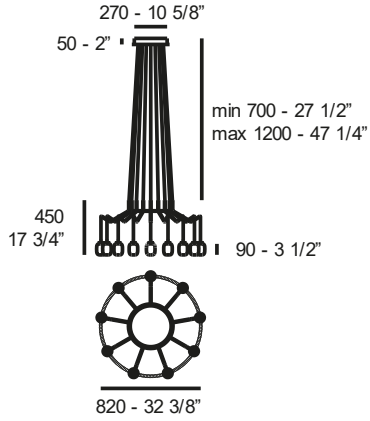

MAX 9x20W HSGT G4

11,5 | 0,293 | 2

Pyrex glass diffuser	*white painted steel*	**€ VAT EXCL.**	*brass galvanized steel*	**€ VAT EXCL.**
WHITE	1C03000614501	**2394,50**	1C03000611201	**2460,50**
WHITE PAINTED STEEL RING		6101915903000		**49,50**

CHAN BT9

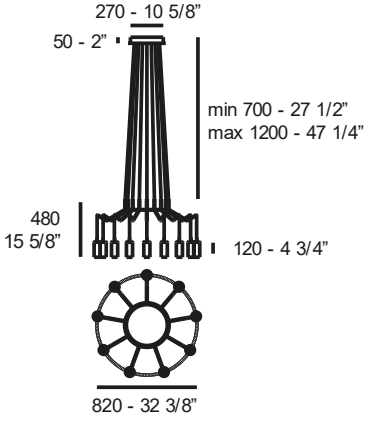

LED 9x4,2W - 2700K (2700lm)
Dimmable trailing edge

11,5 | 0,293 | 2

Pyrex glass diffuser	*white painted steel*	***€ VAT EXCL.***	*brass galvanized steel*	***€ VAT EXCL.***
WHITE	1C03001214501	**2444,00**	1C03001211201	**2510,00**
WHITE PAINTED STEEL RING		6101915903000		**49,50**

CHAN AR9+AR3+R1

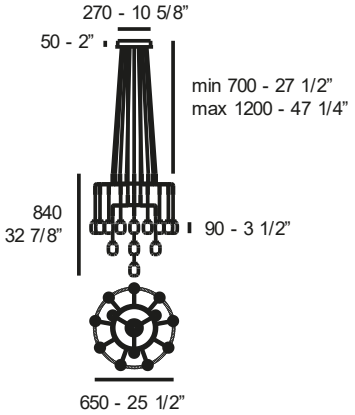

MAX 13x20W HSGT G4

IP20 Dimmable

Kg 14,5 | m³ 0,456 | 3

Pyrex glass diffuser	*white painted steel*	***€ VATEXCL.***	*brass galvanized steel*	***€ VATEXCL.***
WHITE	1C03001914501	**3280,00**	1C03001911201	**3445,00**
WHITE PAINTED STEEL RING		6101915903000		**49,50**

CHAN AT9+AT3+T1

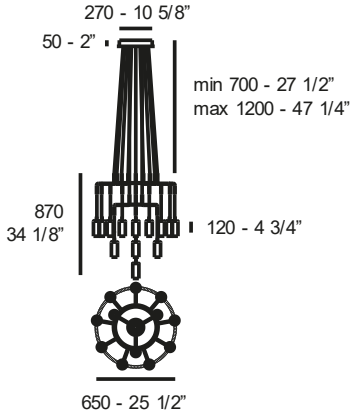

LED 13x4,2W - 2700K (3900lm)

Dimmable trailing edge

IP20 Dimmable

Kg 14,5 | m³ 0,456 | 3

Pyrex glass diffuser	*white painted steel*	***€ VATEXCL.***	*brass galvanized steel*	***€ VATEXCL.***
WHITE	1C03002214501	**3351,50**	1C03002211201	**3516,50**
WHITE PAINTED STEEL RING		6101915903000		**49,50**

CHAN BR9+AR3+R1

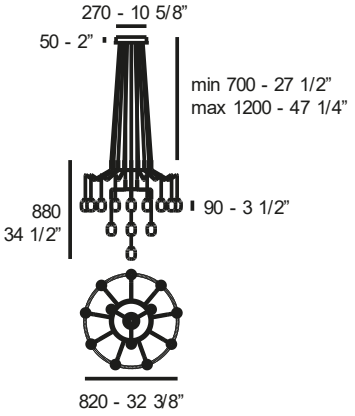

MAX 13x20W HSGT G4

IP20 Dimmable

Kg 14,5 | m³ 0,456 | 3

Pyrex glass diffuser	*white painted steel*	***€ VATEXCL.***	*brass galvanized steel*	***€ VATEXCL.***
WHITE	1C03002014501	**3280,00**	1C03002011201	**3445,00**
WHITE PAINTED STEEL RING		6101915903000		**49,50**

CHAN BR9+BR3+R1

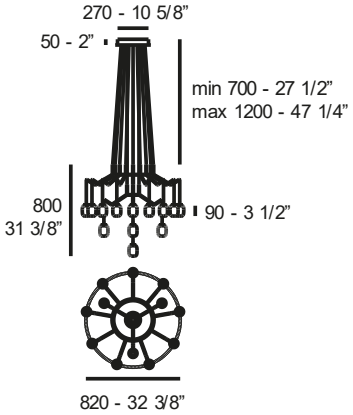

MAX 13x20W HSGT G4

Kg	m³	3
14,5	0,456	

Pyrex glass diffuser	*white painted steel*	***€ VATEXCL.***	*brass galvanized steel*	***€ VATEXCL.***
WHITE	1C03002114501	**3335,00**	1C03002111201	**3445,00**
WHITE PAINTED STEEL RING		6101915903000		**49,50**

CHAN BT9+AT3+T1

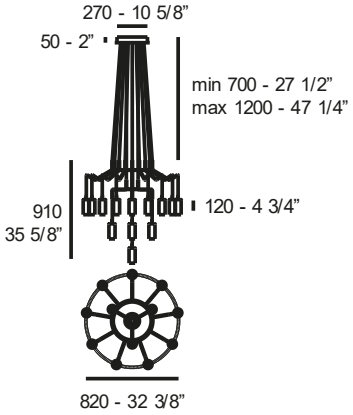

LED 13x4,2W - 2700K (3900lm)

Dimmable trailing edge

Kg	m³	3
14,5	0,456	

Pyrex glass diffuser	*white painted steel*	***€ VATEXCL.***	*brass galvanized steel*	***€ VATEXCL.***
WHITE	1C03002314501	**3351,50**	1C03002311201	**3516,50**
WHITE PAINTED STEEL RING		6101915903000		**49,50**

CHAN BT9+BT3+T1

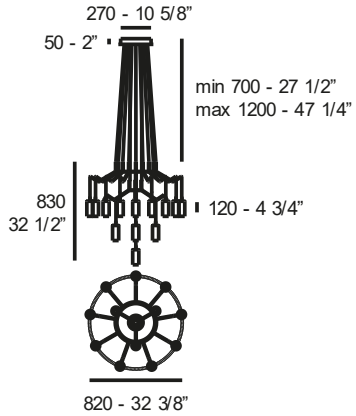

LED 13x4,2W - 2700K (3900lm)

Dimmable trailing edge

Kg	m³	3
14,5	0,456	

Pyrex glass diffuser	*white painted steel*	***€ VATEXCL.***	*brass galvanized steel*	***€ VATEXCL.***
WHITE	1C03002414501	**3351,50**	1C03002411201	**3516,50**
WHITE PAINTED STEEL RING		6101915903000		**49,50**

CPL S1

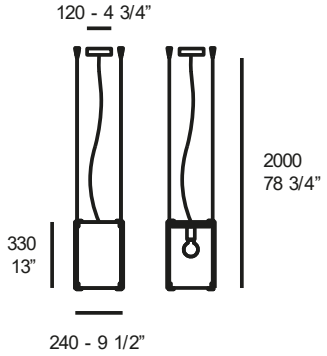

LED E27

IP20

Kg 4,7 | m³ 0,061 | l

glass diffuser	*structure*		*structure*		*€ VAT EXCL.*
OPAL WHITE	CHROME	1083000110101	BRUSHED NICKEL	1083000110201	**660,00**
CLEAR CRYSTAL	CHROME	1083000110120	BRUSHED NICKEL	1083000110220	**690,00**

CPL S7

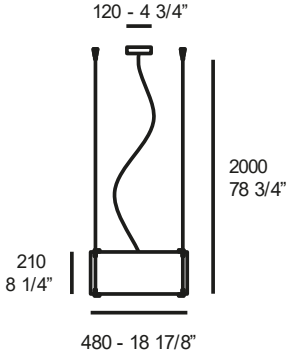

3xLED E27

IP20

Kg 10,5 | m³ 0,175 | l

glass diffuser	*structure*		*structure*		*€ VAT EXCL.*
OPAL WHITE	CHROME	1083000510101	BRUSHED NICKEL	1083000510201	**1200,00**
OPAL RED	CHROME	1083000510106	BRUSHED NICKEL	1083000510206	**1200,00**
MIRROR	CHROME	1083000510107	BRUSHED NICKEL	1083000510207	**1300,00**
COPPER	CHROME	1083000510170	BRUSHED NICKEL	1083000510270	**1300,00**

CPL SMALL T1

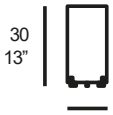

180 - 7 1/8”

LED E27

3,0 0,057

mm 1950

glass diffuser, dimmer on cable	*structure*		*structure*		*€ VAT EXCL.*
OPAL WHITE	CHROME	1094000110101	BRUSHED NICKEL	1094000110201	**357,00**

CPL T1

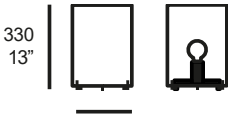

240 - 9 1/2”

LED E27

5,2 0,078

mm 1950

glass diffuser, dimmer on cable	*structure*		*structure*		*€ VAT EXCL.*
OPAL WHITE	CHROME	1084000110101	BRUSHED NICKEL	1084000110201	**544,00**
CLEAR CRYSTAL	CHROME	1084000110120	BRUSHED NICKEL	1084000110220	**544,00**

CPL T3

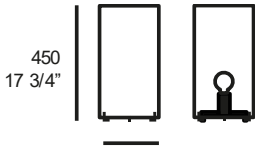

240 - 9 1/2”

LED E27

5,0 0,091

mm 1950

glass diffuser, dimmer on cable	*structure*		*structure*		*€ VAT EXCL.*
OPAL WHITE	CHROME	1084000210101	BRUSHED NICKEL	1084000210201	**599,00**
CLEAR CRYSTAL	CHROME	1084000210120	BRUSHED NICKEL	1084000210220	**599,00**

CPL T30

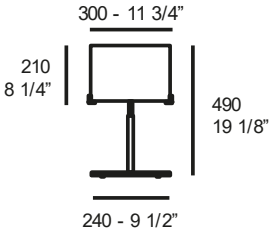

LED E27

IP20 Dimmable

Kg 8,5 | m³ 0,116 | 2

mm 2070

glass diffuser, dimmer on cable	*structure*	*structure*		***€ VAT EXCL.***
OPAL WHITE	CHROME 1084000510101	BRUSHED NICKEL	1084000510201	**790,00**

CPL F1

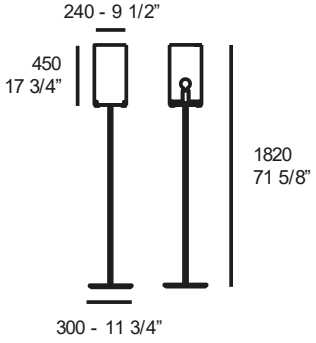

LED E27

IP20 Dimmable

Kg 16,2 | m³ 0,218 | 3

mm 2690

glass diffuser, dimmer on cable	*structure*	*structure*		***€ VAT EXCL.***
OPAL WHITE	CHROME 1082000110101	BRUSHED NICKEL	1082000110201	**1235,00**
CLEAR CRYSTAL	CHROME 1082000110120	BRUSHED NICKEL	1082000110220	**1279,00**

CPL F7

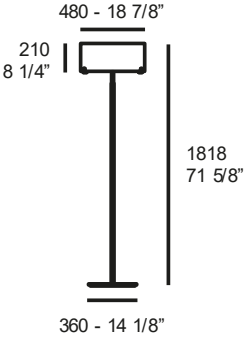

3xLED E27

IP20 Dimmable

Kg 25,0 | m³ 0,414 | 3

mm 2410

dimmer on cable

glass diffuser

	structure	*structure*		***€ VAT EXCL.***
OPAL WHITE	CHROME 1082000610101	BRUSHED NICKEL	1082000610201	**1510,00**
OPAL RED	CHROME 1082000610106	BRUSHED NICKEL	1082000610206	**1620,00**
MIRROR	CHROME 1082000610107	BRUSHED NICKEL	1082000610207	**1719,00**
COPPER	CHROME 1082000610170	BRUSHED NICKEL	1082000610270	**1719,00**

CPL MINI W1

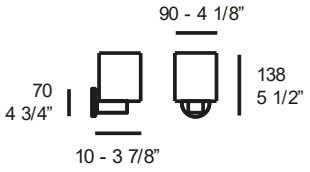

MAX 6W LED G9

IP44

Kg 1,0 | m³ 0,017 | I

glass diffuser	*structure*		***€ VAT EXCL.***
OPAL WHITE	MATT WHITE	1815000113001	**302,50**
GLOSSY WHITE	CHROME	1815000110132	**302,50**

CPL MINI W3

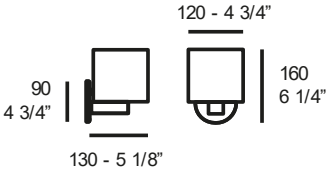

MAX 6W LED G9

IP44

Kg 1,3 | m³ 0,018 | I

glass diffuser	*structure*		***€ VAT EXCL.***
OPAL WHITE	MATT WHITE	1815000213001	**320,00**
GLOSSY WHITE	CHROME	1815000210132	**320,00**

CPL MINI W5

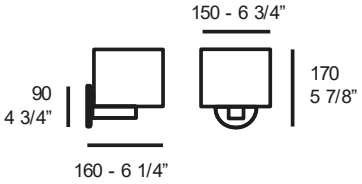

MAX 6W LED G9

IP44

Kg 1,5 | m³ 0,032 | I

glass diffuser	*structure*		***€ VAT EXCL.***
OPAL WHITE	MATT WHITE	1815000313001	**330,00**
GLOSSY WHITE	CHROME	1815000310132	**330,00**

DIVER S1

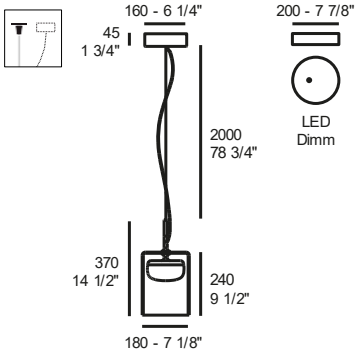

LED 8,5W - 2700/3000K (1044lm)

4,3 0,061

S1 - dimmable traling edge

Internal diffuser in opal white glass, clear crystal external diffuser, matt painted or galvanized metal structure, cable exit part in chrome.	*K °2700*	*K °3000*	***€ VAT EXCL.***
MATT WHITE	1C71000113001	1C71000213001	**759,00**
MATT BLACK	1C71000113501	1C71000213501	**759,00**
GLOSSY BRASS	1C71000111201	1C71000211201	**775,50**
GLOSSY COPPER	1C71000117001	1C71000217001	**775,50**

S1 DIMM (Dali/DSI - SwitchDIM - 1...10V - 0...10V)

Internal diffuser in opal white glass, clear crystal external diffuser, matt painted or galvanized metal structure, cable exit part in chrome.	*K °2700*	*K °3000*	***€ VAT EXCL.***
MATT WHITE	1C75000113001	1C75000213001	**792,00**
MATT BLACK	1C75000113501	1C75000213501	**792,00**
GLOSSY BRASS	1C75000111201	1C75000211201	**808,50**
GLOSSY COPPER	1C75000117001	1C75000217001	**808,50**

SURCHARGE FOR CABLE EXIT PART MATCHING THE STRUCTURE'S COLOUR		**16,50**
LATERAL CEILING ATTACHMENT	6993601500100	**39,60**

DIVER S3

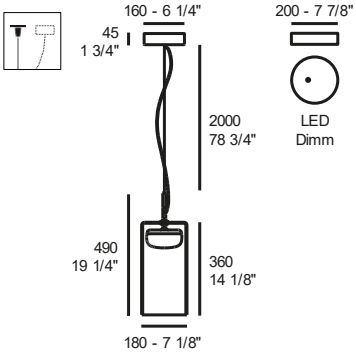

LED 8,5W - 2700/3000K (1044lm)

Kg	m³	I
5,0	0,074	

S3 – dimmable traling edge
Internal diffuser in opal white glass, clear crystal external diffuser, matt painted or galvanized metal structure, cable exit part in chrome.

	K °2700	K °3000	€ VAT EXCL.
MATT WHITE	1C71001113001	1C71001213001	**770,00**
MATT BLACK	1C71001113501	1C71001213501	**770,00**
GLOSSY BRASS	1C71001111201	1C71001211201	**786,50**
GLOSSY COPPER	1C71001117001	1C71001217001	**786,50**

S3 DIMM (Dali/DSI - SwitchDIM - 1...10V - 0...10V)
Internal diffuser in opal white glass, clear crystal external diffuser, matt painted or galvanized metal structure, cable exit part in chrome.

	K °2700	K °3000	€ VAT EXCL.
MATT WHITE	1C75001113001	1C75001213001	**803,00**
MATT BLACK	1C75001113501	1C75001213501	**803,00**
GLOSSY BRASS	1C75001111201	1C75001211201	**819,50**
GLOSSY COPPER	1C75001117001	1C75001217001	**819,50**

SURCHARGE FOR CABLE EXIT PART MATCHING THE STRUCTURE'S COLOUR		**16,50**
LATERAL CEILING ATTACHMENT	6993601500100	**39,60**

DIVER S5

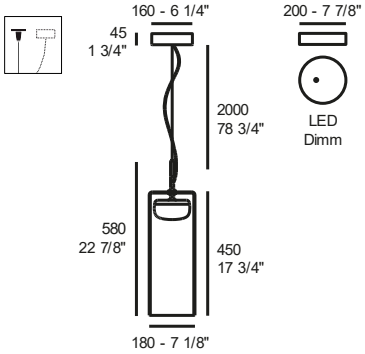

LED 8,5W - 2700/3000K (1044lm)

Kg	m³	I
5,7	0,087	

S5 - traling edge dimmable
Internal diffuser in opal white glass, clear crystal external diffuser, matt painted or galvanized metal structure, cable exit part in chrome.

	K °2700	K °3000	€ VAT EXCL.
MATT WHITE	1C71002113001	1C71002213001	**781,00**
MATT BLACK	1C71002113501	1C71002213501	**781,00**
GLOSSY BRASS	1C71002111201	1C71002211201	**797,50**
GLOSSY COPPER	1C71002117001	1C71002217001	**797,50**

S5 DIMM (Dali/DSI - SwitchDIM - 1...10V - 0...10V)
Internal diffuser in opal white glass, clear crystal external diffuser, matt painted or galvanized metal structure, cable exit part in chrome.

	K °2700	K °3000	€ VAT EXCL.
MATT WHITE	1C75002113001	1C75002213001	**814,00**
MATT BLACK	1C75002113501	1C75002213501	**814,00**
GLOSSY BRASS	1C75002111201	1C75002211201	**830,50**
GLOSSY COPPER	1C75002117001	1C75002217001	**830,50**

SURCHARGE FOR CABLE EXIT PART MATCHING THE STRUCTURE'S COLOUR		**16,50**
LATERAL CEILING ATTACHMENT	6993601500100	**39,60**

DIVER T1

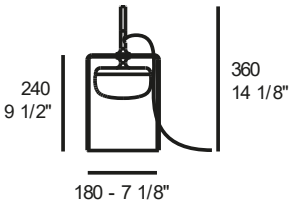

LED 8,5W - 2700/3000K (1044lm)

dimmer on cable

3,7 | 0,061 | mm 2500

Internal diffuser in opal white glass, clear crystal external diffuser,
matt painted or galvanized metal structure, cable exit part in chrome, white fabric cable.

	K °2700	*K °3000*	*€ VAT EXCL.*
MATT WHITE	1C70000113001	1C70000213001	**687,50**
MATT BLACK	1C70000113501	1C70000213501	**687,50**
GLOSSY BRASS	1C70000111201	1C70000211201	**698,50**
GLOSSY COPPER	1C70000117001	1C70000217001	**698,50**

SURCHARGE FOR BLACK, LIGHT GREY OR BURGUNDY POWER CABLE	**16,50**
SURCHARGE FOR CABLE EXIT PART MATCHING THE STRUCTURE'S COLOUR	**16,50**

DIVER T3

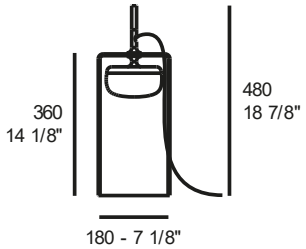

LED 8,5W - 2700/3000K (1044lm)

dimmer on cable

4,4 | 0,074 | mm 2500

Internal diffuser in opal white glass, clear crystal external diffuser,
matt painted or galvanized metal structure, cable exit part in chrome, white fabric cable.

	K °2700	*K °3000*	*€ VAT EXCL.*
MATT WHITE	1C70001113001	1C70001213001	**709,50**
MATT BLACK	1C70001113501	1C70001213501	**709,50**
GLOSSY BRASS	1C70001111201	1C70001211201	**720,50**
GLOSSY COPPER	1C70001117001	1C70001217001	**720,50**

SURCHARGE FOR BLACK, LIGHT GREY OR BURGUNDY POWER CABLE	**16,50**
SURCHARGE FOR CABLE EXIT PART MATCHING THE STRUCTURE'S COLOUR	**16,50**

DIVER T5

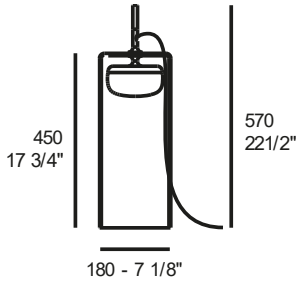

LED 8,5W - 2700/3000K (1044lm)

dimmer on cable

5,1 | 0,087 | mm 2500

Internal diffuser in opal white glass, clear crystal external diffuser,
matt painted or galvanized metal structure, cable exit part in chrome, white fabric cable.

	K °2700	*K °3000*	*€ VAT EXCL.*
MATT WHITE	1C70002113001	1C70002213001	**726,00**
MATT BLACK	1C70002113501	1C70002213501	**726,00**
GLOSSY BRASS	1C70002111201	1C70002211201	**731,50**
GLOSSY COPPER	1C70002117001	1C70002217001	**731,50**

SURCHARGE FOR BLACK, LIGHT GREY OR BURGUNDY POWER CABLE	**16,50**
SURCHARGE FOR CABLE EXIT PART MATCHING THE STRUCTURE'S COLOUR	**16,50**

DIVER W5

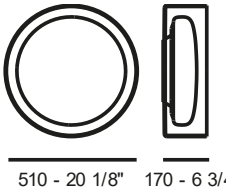

LED 20W - 2700/3000K (3121lm)

Kg 18,2 | m³ 0,233

W5 – dimmable trailing edge

Internal diffuser in opal white glass, clear crystal or glossy smoked grey external glass diffuser	*K °2700*	*K °3000*	***€ VAT EXCL.***
CLEAR CRYSTAL	1C73000113001	1C73000213001	**1078,00**
GLOSSY SMOKED GREY	1C73000113026	1C73000213026	**1188,00**

W5 DIMM (Dali/DSI - PushDIM - 1...10V - 0...10V)

Internal diffuser in opal white glass, clear crystal or glossy smoked grey external glass diffuser	*K °2700*	*K °3000*	***€ VAT EXCL.***
CLEAR CRYSTAL	1C74000113001	1C74000213001	**1200,00**
GLOSSY SMOKED GREY	1C74000113026	1C74000213026	**1250,00**

DIVER C1

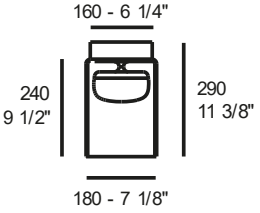

LED 8,5W - 2700/3000K (1044lm)

Dimmable trailing edge

Kg 4,5 | m³ 0,061

Internal diffuser in opal white glass, clear crystal external diffuser, matt painted or galvanized metal structure	*K °2700*	*K °3000*	***€ VAT EXCL.***
MATT WHITE	1C72000113001	1C72000213001	**643,50**
MATT BLACK	1C72000113501	1C72000213501	**643,50**
GLOSSY BRASS	1C72000111201	1C72000211201	**671,00**
GLOSSY COPPER	1C72000117001	1C72000217001	**671,00**

DALI DIMMABLE LED VERSION AVAILABLE ON REQUEST **+98,00**

DIVER C3

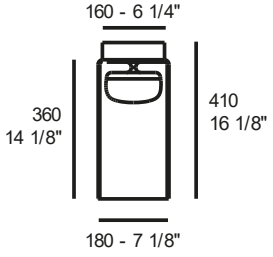

LED 8,5W - 2700/3000K (1044lm)

Dimmable trailing edge

Kg 5,2 | m³ 0,074

Internal diffuser in opal white glass, clear crystal external diffuser, matt painted or galvanized metal structure	*K °2700*	*K °3000*	***€ VAT EXCL.***
MATT WHITE	1C72001113001	1C72001213001	**660,00**
MATT BLACK	1C72001113501	1C72001213501	**660,00**
GLOSSY BRASS	1C72001111201	1C72001211201	**693,00**
GLOSSY COPPER	1C72001117001	1C72001217001	**693,00**

DALI DIMMABLE LED VERSION AVAILABLE ON REQUEST **+98,00**

DIVER C5

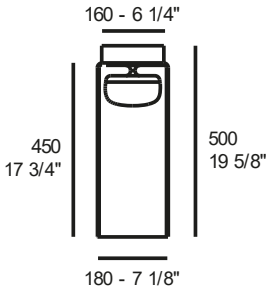

LED 8,5W - 2700/3000K (1044lm)

Dimmable trailing edge

Kg	m³	l
5,9	0,087	

Internal diffuser in opal white glass, clear crystal external diffuser, matt painted or galvanized metal structure

	K °2700	*K °3000*	***€ VATEXCL.***
MATT WHITE	1C72002113001	1C72002213001	**671,00**
MATT BLACK	1C72002113501	1C72002213501	**671,00**
GLOSSY BRASS	1C72002111201	1C72002211201	**704,00**
GLOSSY COPPER	1C72002117001	1C72002217001	**704,00**

DALI DIMMABLE LED VERSION AVAILABLE ON REQUEST **+98,00**

DOLOMITE W1

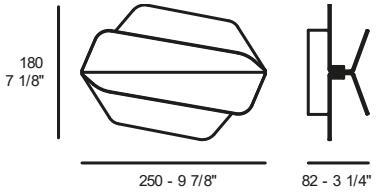

LED 8W – 3000K (1000lm)
CRI>90

IP20

Kg **4,7** m³ **0,03** 1

Matt painted metal diffuser, up&down light ***€ VATEXCL.***

WHITE OUTSIDE – WHITE INSIDE – suitable also for outdoor (IP55)	1D03000113001	**140,00**
WHITE OUTSIDE – GOLD LEAF INSIDE	1D03000113098	**160,00**

EFFIMERA F5

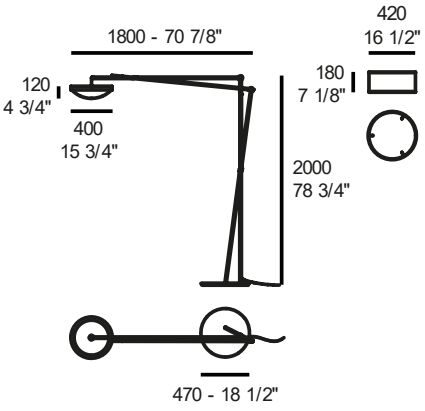

LED 15W - 3000K (2400lm)

34,2 0,269

2700K available with a surcharge of 3%

mm 2800

methacrylate diffuser	*alluminium structure*		*alluminium structure*		*€ VAT EXCL.*
OPAL WHITE	MATT WHITE	1B32000413000	GLOSSY BLACK	1B32000414600	**2395,00**
ON REQUEST - white fabric lampshade				6B32000200001	**220,00**
ON REQUEST - black fabric lampshade				6B32000200005	**220,00**

EFFIMERA F50

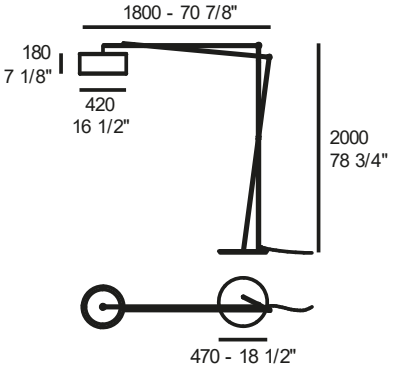

2xLED E27

34,2 0,269

mm 2800

methacrylate diffuser	*alluminium structure*		*alluminium structure*		*€ VAT EXCL.*
OPAL WHITE	MATT WHITE	1B32000513000	GLOSSY BLACK	1B32000514600	**2200,00**

EQUILIBRE S3 - UPLIGHT

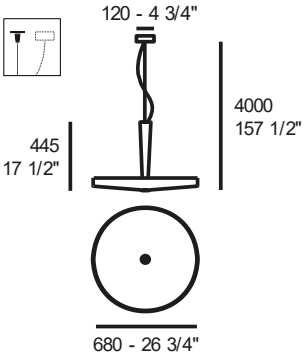

LED 54W - 3000K (9280lm)

Tunable white LED 49.6W - 2700-6500K DALI (6100lm)

Kg	m³	
9,6	0,133	2

2700K available with a surcharge of 3%

LED S3 – dimmable trailing edge *painted aluminium diffuser*		***€ VATEXCL.***
MATT WHITE	1516000113000	**990,00**
LED S3 – Dali/DSI - SwitchDIM *painted aluminium diffuser*		***€ VATEXCL.***
MATT WHITE	1516000213000	**1100,00**
TW LED S3 – Tunable white Dali control *painted aluminium diffuser*		***€ VATEXCL.***
MATT WHITE	1516000413000	**1250,00**
LATERAL CEILING ATTACHMENT	6993601500100	**39,60**

EQUILIBRE LED S33 – TOTAL LIGHT DIFFUSION

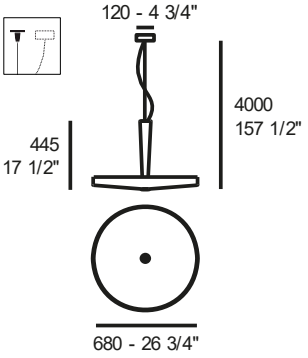

LED 33W - 3000K (5400lm)

Kg	m³	
7,0	0,312	1

2700K available with a surcharge of 3%

LED 33 – dimmable trailing edge *roto-moulded polyethylene diffuser*		***€ VATEXCL.***
OPAL WHITE	1516001113000	**990,00**
LATERAL CEILING ATTACHMENT	6993601500100	**39,60**

EQUILIBRE LED F3 - UPLIGHT

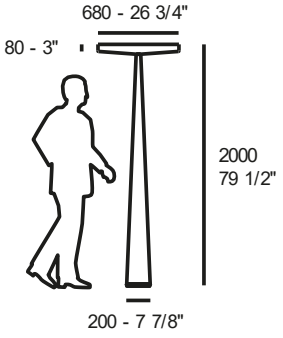

LED 54W – 3000K (9280lm)

IP20 Dimmable

Kg **19,1** m³ **0,255** 2

dimmer on cable

mm 2380

2700K available with a surcharge of 3%

LED F3 (internal fixing base included) – dimmable trailing edge
matt painted polypropylene and aluminium

	Dimmable	*€ VAT EXCL.*
MATT WHITE (RAL 9003)	1515000113000	**1500,00**
MATT BLACK (RAL 9011)	1515000113500	**1500,00**
ON REQUEST - kit with 2 internal weights (23,2 kg total)	6134500100000	**297,00**

EQUILIBRE LED F33 TOTAL LIGHT DIFFUSION

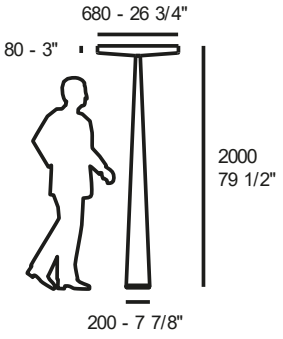

LED 33W - 3000K (5400lm)

INDOOR OUTDOOR

20,0 0,27

2700K available with a surcharge of 3%

mm 2380

LED F33 INDOOR (internal fixing base included) – dimmable trailing edge – dimmer on cable
roto-moulded polyethylene diffuser

		€ VAT EXCL.
WHITE	1515000610000	**1375,00**
ON REQUEST - kit with 2 internal weights (23,2 kg total)	6134500100000	**297,00**

LED F33 OUTDOOR (internal fixing base included) – dimmable trailing edge – dimmer not provided
matt painted polypropylene diffuser

					€ VAT EXCL.
WHITE				1515000710000	**1485,00**
ON REQUEST - stability base kg. 13,1 (not suitable for ground fixing)	MATT WHITE	6101908103000	MATT BLACK	6101908103500	**220,00**

EQUILIBRE LED F33 DOWNLIGHT

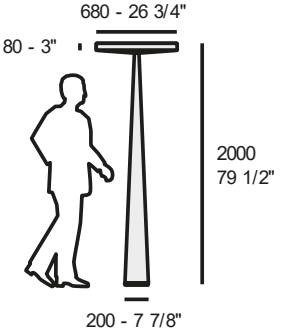

LED 33W - 3000K (5400lm)

INDOOR OUTDOOR

20,0 0,27

2700K available with a surcharge of 3%

mm 2380

LED F33 INDOOR DOWNLIGHT (internal fixing base included) – dimmable trailing edge – dimmer on cable
roto-moulded polyethylene diffuser

		€ VAT EXCL.
MATT RUST	1515000614900	**2000,00**
MATT BLACK	1515000613500	**2000,00**
ON REQUEST - kit with 2 internal weights (23,2 kg total)	6134500100000	**297,00**

LED F33 OUTDOOR DOWNLIGHT (internal fixing base included) – dimmable trailing edge – dimmer not provided
roto-moulded polyethylene diffuser

					€ VAT EXCL.
MATT RUST				1515000714900	**2200,00**
MATT BLACK				1515000713500	**2200,00**
ON REQUEST - stability base kg. 13,1 (not suitable for ground fixing)	MATT WHITE	6101908103000	MATT BLACK	6101908103500	**220,00**

EQUILIBRE LED C3 - UPLIGHT

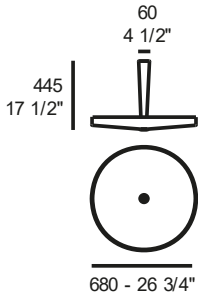

LED 54W - 3000K (9280lm)

Tunable white LED 49.6W - 2700-6500K DALI (6100lm)

Kg	m³	
10,0	0,133	2

2700K available with a surcharge of 3%

LED C3 – dimmable trailing edge *painted aluminium diffuser*		***€ VATEXCL.***
MATT WHITE	1514000113000	**920,00**
LED C3 – Dali/DSI - SwitchDIM *painted aluminium diffuser*		***€ VATEXCL.***
MATT WHITE	1514000213000	**1000,00**
TW LED S3 – Tunable white Dali control *painted aluminium diffuser*		***€ VATEXCL.***
MATT WHITE	1514000413000	**1150,00**
LATERAL CEILING ATTACHMENT	6993601500100	**39,60**

EQUILIBRE LED C33 – TOTAL LIGHT DIFFUSION

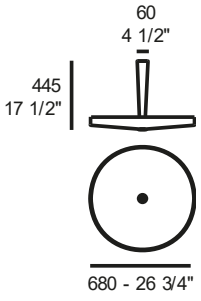

LED 33W - 3000K (5400lm)

Kg	m³	
7,0	0,312	1

2700K available with a surcharge of 3%

LED C33 – dimmable trailing edge *roto-moulded polyethylene diffuser*		***€ VATEXCL.***
OPAL WHITE	1514001113000	**990,00**

EXTRA S1

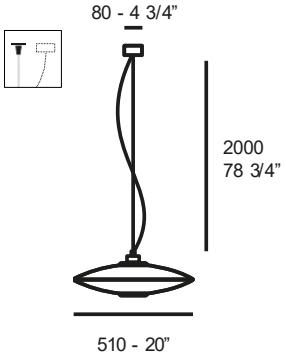

LED E27

IP20

6,5 kg | 0,09 m³ | 2

double glass diffusers + white pyrex inner filter — ***€ VAT EXCL.***

OPAL WHITE	1143000710101	**645,00**
OPAL WHITE / MIRROR	1143000710107	**695,00**
LATERAL CEILING ATTACHMENT	6993601500100	**39,60**

EXTRA S3

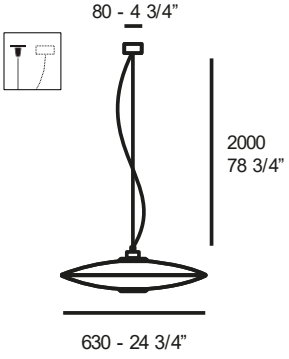

LED E27

IP20

9,0 kg | 0,124 m³ | 2

double glass diffusers + white pyrex inner filter — ***€ VAT EXCL.***

OPAL WHITE	1143000810101	**775,00**
OPAL WHITE / MIRROR	1143000810107	**845,00**
LATERAL CEILING ATTACHMENT	6993601500100	**39,60**

FEZ S1

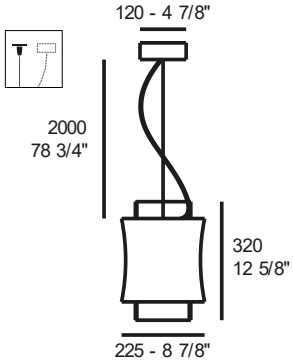

LED E27

IP20

Kg 6,0 | m³ 0,09 | 1

Crystal diffuser and outer metal diffuser		***€ VAT EXCL.***
MATT WHITE METAL DIFFUSER	1D04100110101	**745,00**
GLOSSY BLACK METAL DIFFUSER	1D04100110105	**745,00**
COPPER METAL DIFFUSER	1D04100110170	**855,00**
GLOSSY BRASS METAL DIFFUSER	1D04100110116	**855,00**
MATT SAND METAL DIFFUSER	1D04100110127	**775,00**

FEZ S3

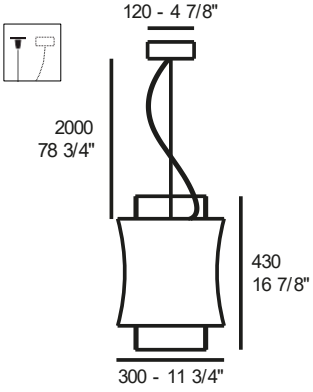

LED E27

IP20

Kg 9,5 | m³ 0,16 | 2

Crystal diffuser and outer metal diffuser		***€ VAT EXCL.***
MATT WHITE METAL DIFFUSER	1D04100310101	**915,00**
GLOSSY BLACK METAL DIFFUSER	1D04100310105	**915,00**
COPPER METAL DIFFUSER	1D04100310170	**1065,00**
GLOSSY BRASS METAL DIFFUSER	1D04100310116	**1065,00**
MATT SAND METAL DIFFUSER	1D04100310127	**990,00**

FEZ T1

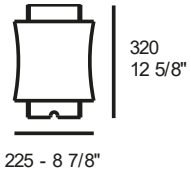

LED E27

dimmer on cable

Kg 4,0 | m³ 0,066 | 1

mm 2000

Crystal diffuser and outer metal diffuser, black fabric cable		***€ VATEXCL.***
MATT WHITE METAL DIFFUSER	1D04200110101	**735,00**
GLOSSY BLACK METAL DIFFUSER	1D04200110105	**735,00**
COPPER METAL DIFFUSER	1D04200110170	**860,00**
GLOSSY BRASS METAL DIFFUSER	1D04200110116	**860,00**
MATT SAND METAL DIFFUSER	1D04200110127	**775,00**

FEZ T3

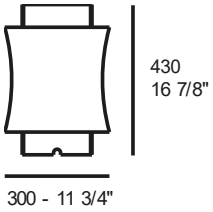

LED E27

dimmer on cable

Kg 6,0 | m³ 0,08 | 2

mm 2000

Crystal diffuser and outer metal diffuser, black fabric cable		***€ VATEXCL.***
MATT WHITE METAL DIFFUSER	1D04200310101	**915,00**
GLOSSY BLACK METAL DIFFUSER	1D04200310105	**915,00**
COPPER METAL DIFFUSER	1D04200310170	**1055,00**
GLOSSY BRASS METAL DIFFUSER	1D04200310116	**1055,00**
MATT SAND METAL DIFFUSER	1D04200310127	**935,00**

FEZ F1

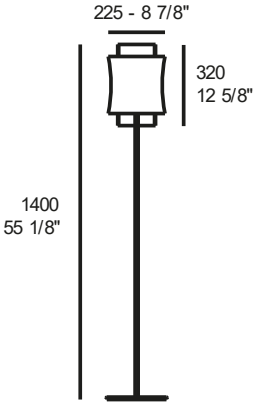

LED E27

Kg 16,4 | m³ 0,218 | 3

dimmer on cable

mm 2000

Crystal diffuser and outer metal diffuser, chrome structure, black fabric cable		***€ VAT EXCL.***
MATT WHITE METAL DIFFUSER	1D04300110101	**970,00**
GLOSSY BLACK METAL DIFFUSER	1D04300110105	**970,00**
COPPER METAL DIFFUSER	1D04300110170	**1080,00**
GLOSSY BRASS METAL DIFFUSER	1D04300110116	**1080,00**
MATT SAND METAL DIFFUSER	1D04300110127	**990,00**
SURCHARGE FOR MATT BLACK STRUCTURE		**30,00**

FEZ F3

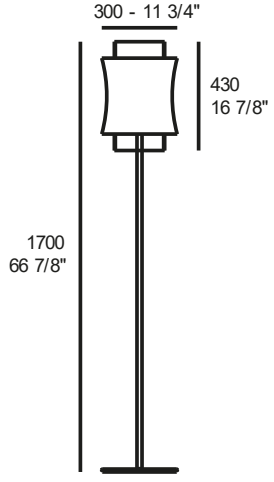

LED E27

Kg 23,5 | m³ 0,238 | 4

dimmer on cable

mm 2000

Crystal diffuser and outer metal diffuser, chrome structure, black fabric cable		***€ VAT EXCL.***
MATT WHITE METAL DIFFUSER	1D04300310101	**1157,00**
GLOSSY BLACK METAL DIFFUSER	1D04300310105	**1157,00**
COPPER METAL DIFFUSER	1D04300310170	**1295,00**
GLOSSY BRASS METAL DIFFUSER	1D04300310116	**1295,00**
MATT SAND METAL DIFFUSER	1D04300310127	**1223,00**
SURCHARGE FOR MATT BLACK STRUCTURE		**40,00**

FINLAND C1

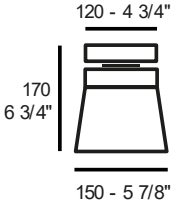

LED E27 | IP20 | Kg 1,4 | m³ 0,018 | I

Painted glass diffuser	*metal ceiling rose*		***€ VAT EXCL.***
WHITE	CHROME	1151000110101	**275,00**

FINLAND C1G

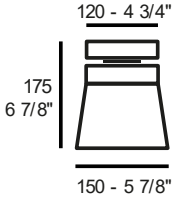

LED E27 | IP20 | Kg 1,4 | m³ 0,018 | I

Painted glass diffuser	*glass ceiling rose*		***€ VAT EXCL.***
WHITE	WHITE	1151000210001	**275,00**

FINLAND C3

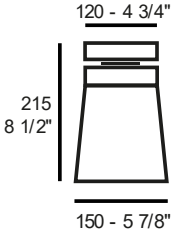

LED E27 | IP20 | Kg 1,5 | m³ 0,026 | I

Painted glass diffuser	*metal ceiling rose*		***€ VAT EXCL.***
WHITE	CHROME	1151000410101	**297,00**

FINLAND C3G

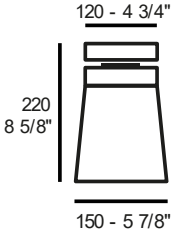

LED E27 | IP20 | Kg 1,5 | m³ 0,026 | I

Painted glass diffuser	*glass ceiling rose*		***€ VAT EXCL.***
WHITE	WHITE	1151000510001	**297,00**

FLYER W3

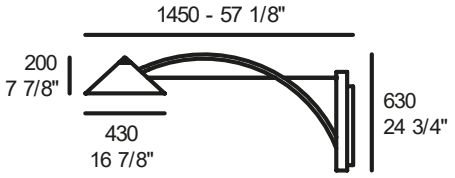

INDOOR:
LED 38W - 2700/3000K (5000lm)

OUTDOOR:
LED 38W - 2700K (4370lm)

INDOOR OUTDOOR

13,7 kg | 0,27 m³ | 2

Metal painted pivoting 45° structure
Dimmable trailing edge (DALI on request)

LED W3 INDOOR – dimmable trailing edge	*K °2700*	*K °3000*	***€ VAT EXCL.***
MATT WHITE	1D05100113001	1D05100213001	**1295,00**
MATT BLACK	1D05100113505	1D05100213505	**1295,00**

VERSION WITH FABRIC CABLE AND PLUG AVAILABLE ON REQUEST WITH SURCHARGE

LED W3 OUTDOOR	*K °2700*		***€ VAT EXCL.***
MATT WHITE	1D05200113001	---	**1600,00**
MATT BLACK	1D05200113505	---	**1600,00**

VERSION WITH CABLE AND OUTDOOR WIRING AVAILABLE ON REQUEST WITH SURCHARGE

FLYER W5

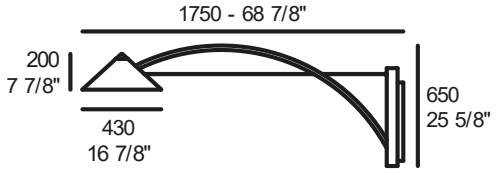

INDOOR:
LED 38W - 2700/3000K (5000lm)

OUTDOOR:
LED 38W - 2700K (4370lm)

INDOOR OUTDOOR

13,7 kg | 0,27 m³ | 2

Metal painted pivoting 45° structure
Dimmable trailing edge (DALI on request)

LED W5 INDOOR – dimmable trailing edge	*K °2700*	*K °3000*	***€ VAT EXCL.***
MATT WHITE	1D05101113001	1D05101213001	**1350,00**
MATT BLACK	1D05101113505	1D05101213505	**1350,00**

VERSION WITH FABRIC CABLE AND PLUG AVAILABLE ON REQUEST WITH SURCHARGE

LED W5 OUTDOOR	*K °2700*		***€ VAT EXCL.***
MATT WHITE	1D05201113001	---	**1800,00**
MATT BLACK	1D05201113505	---	**1800,00**

VERSION WITH CABLE AND OUTDOOR WIRING AVAILABLE ON REQUEST WITH SURCHARGE

GINGER S30

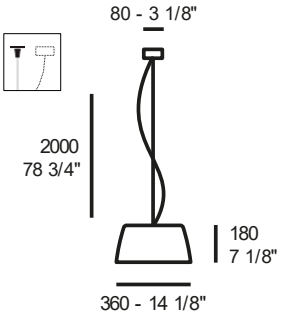

LED E27

Kg 3,0 | m³ 0,057 | I

polyethylene diffuser — ***€ VATEXCL.***

OPAL WHITE	1903001913000	**350,00**
LATERAL CEILING ATTACHMENT	6993601500100	**39,60**

GINGER S50

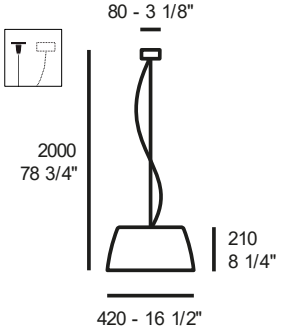

LED E27

Kg 3,8 | m³ 0,083 | I

polyethylene diffuser — ***€ VATEXCL.***

OPAL WHITE	1903002013000	**390,00**
LATERAL CEILING ATTACHMENT	6993601500100	**39,60**

GINGER T30

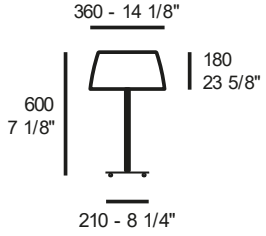

LED E27

Kg 5,9 | m³ 0,092 | 2

dimmer on cable — mm 1870

polyethylene diffuser, white fabric cable — *structure* — ***€ VATEXCL.***

OPAL WHITE	MATT WHITE	1904001313000	**475,00**

GINGER T50

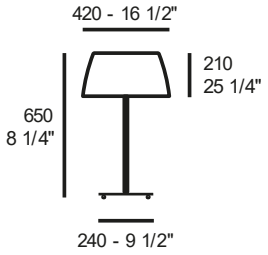

LED E27

IP20 Dimmable

Kg 8,3 | m³ 0,183 | 2

dimmer on cable — mm 2500

polyethylene diffuser, white fabric cable	*structure*		***€ VAT EXCL.***
OPAL WHITE	MATT WHITE	1904001413000	**495,00**

GINGER F30

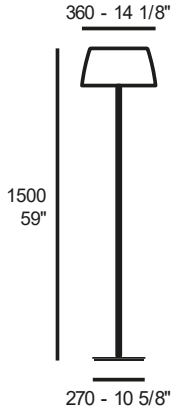

2xLED E27

IP20 Dimmable

Kg 11,9 | m³ 0,158 | 3

dimmer on cable — mm 2610

polyethylene diffuser, white fabric cable	*structure*		***€ VAT EXCL.***
OPAL WHITE	MATT WHITE	1902001313000	**550,00**

GINGER F50

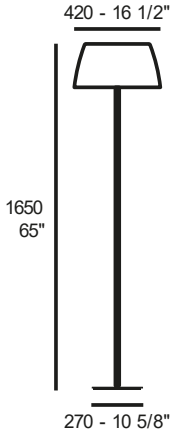

2xLED E27

IP20 Dimmable

Kg 13,4 | m³ 0,191 | 3

dimmer on cable — mm 2480

polyethylene diffuser, white fabric cable	*structure*		***€ VAT EXCL.***
OPAL WHITE	MATT WHITE	1902001413000	**590,00**

PATENT PENDING

GLAM SMALL T1

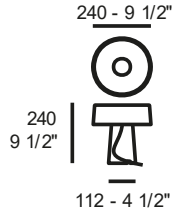

MAX 6W LED G9

dimmer on cable

Kg 2,8 | m³ 0,04 | I

mm 1840

base / glass diffuser + transparent power cable		*€ VATEXCL.*
CLEAR / OPAL WHITE	1884000110001	**445,00**
CLEAR / OPAL RED	1884000110006	**445,00**

GLAM SMALL T3

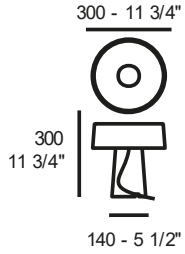

MAX 6W LED G9

dimmer on cable

Kg 4,4 | m³ 0,097 | I

mm 1785

base / glass diffuser + transparent power cable		*€ VATEXCL.*
CLEAR / OPAL WHITE	1884000210001	**595,90**
CLEAR / OPAL RED	1884000210006	**595,00**

GLAM T1

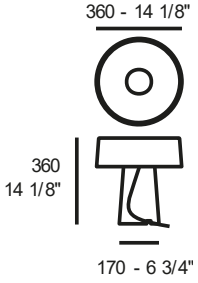

MAX 3x6W G9

dimmer on cable

Kg 7,6 | m³ 0,12 | 2

mm 2200

base / glass diffuser + red fabric-covered power cable		*€ VATEXCL.*
CLEAR / OPAL WHITE	1474000112001	**980,00**
CLEAR / OPAL BLACK	1474000112005	**980,00**
CLEAR / OPAL RED	1474000112006	**980,00**
CLEAR / MIRROR	1474000112007	**990,00**

GLAM T3

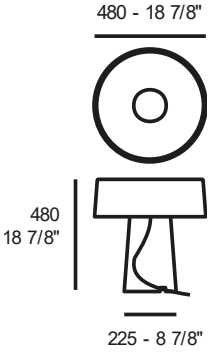

MAX 3X6W G9

IP20 Dimmable

Kg **13,0** m³ **0,206** **2**

dimmer on cable

mm 2100

base / glass diffuser + red fabric-covered power cable ***€ VAT EXCL.***

CLEAR / OPAL WHITE	1474000212001	**1080,00**
CLEAR / OPAL BLACK	1474000212005	**1080,00**
CLEAR / OPAL RED	1474000212006	**1080,00**
CLEAR / MIRROR	1474000212007	**1199,00**

GONG S1/LED S1

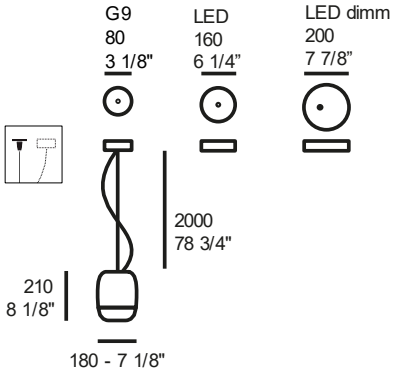

MAX 1x6W LED G9
* **LED 4,2W - 2700K (300lm)**
° **LED 4,8W - 3000K (720lm)**

IP20 Dimmable

Kg **2,4** m³ **0,031** I

G9

glossy glass diffuser	*metal structure*		***€ VAT EXCL.***
WHITE / CLEAR	MATT WHITE	1A63003813001	**455,00**
SILVER METALIZED TRANSMIRROR / CLEAR	CHROME	1A63003810171	**545,00**
GOLDEN COPPER METALIZED TRANSMIRROR / CLEAR	CHROME	1A63003810170	**545,00**
BLACK METALIZED TRANSMIRROR / CLEAR	CHROME	1A63003810105	**545,00**
GLORY ROSE METALIZED TRANSMIRROR/ CLEAR	CHROME	1A63003810199	**545,00**
GOLD LEAF / CLEAR	CHROME	1A63003810198	**485,00**

LED – dimmable trailing edge

glossy glass diffuser	*metal structure*		***€ VAT EXCL.***
° WHITE / CLEAR	MATT WHITE	1A63003213001	**655,00**
* SILVER METALIZED TRANSMIRROR / CLEAR	CHROME	1A63003210171	**745,00**
* GOLDEN COPPER METALIZED TRANSMIRROR / CLEAR	CHROME	1A63003210170	**745,00**
* BLACK METALIZED TRANSMIRROR / CLEAR	CHROME	1A63003210105	**745,00**
* GLORY ROSE METALIZED TRANSMIRROR / CLEAR	CHROME	1A63003210199	**745,00**
° GOLD LEAF / CLEAR	CHROME	1A63003210198	**695,00**

LED DIMM (Dali/DSI - SwitchDIM - 1...10V - 0...10V)

glossy glass diffuser	*metal structure*	Dimmable	***€ VAT EXCL.***
° WHITE / CLEAR	MATT WHITE	1A63003313001	**695,00**
* SILVER METALIZED TRANSMIRROR / CLEAR	CHROME	1A63003310171	**795,00**
* GOLDEN COPPER METALIZED TRANSMIRROR / CLEAR	CHROME	1A63003310170	**795,00**
* BLACK METALIZED TRANSMIRROR / CLEAR	CHROME	1A63003310105	**795,00**
* GLORY ROSE METALIZED TRANSMIRROR / CLEAR	CHROME	1A63003310199	**795,00**
° GOLD LEAF / CLEAR	CHROME	1A63003310198	**745,00**

LATERAL CEILING ATTACHMENT		6993601400100	**22,00**

GONG S1 3R/LED 3R

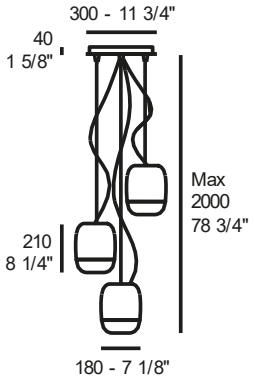

MAX 3x6W LED G9
* **LED 4,2W - 2700K (300lm)**
° **LED 4,8W - 3000K (720lm)**

IP20 Dimmable

Kg **8,6** m³ **0,121** **4**

G9

glossy glass diffuser	*metal structure*		***€ VATEXCL.***
WHITE / CLEAR	MATT WHITE	1A63004413001	**1375,00**
SILVER METALIZED TRANSMIRROR / CLEAR	CHROME	1A63004410171	**1595,00**
GOLDEN COPPER METALIZED TRANSMIRROR / CLEAR	CHROME	1A63004410170	**1595,00**
BLACK METALIZED TRANSMIRROR / CLEAR	CHROME	1A63004410105	**1595,00**
GLORY ROSE METALIZED TRANSMIRROR / CLEAR	CHROME	1A63004410199	**1595,00**
GOLD LEAF / CLEAR	CHROME	1A63004410198	**1430,00**

LED – dimmable trailing edge

glossy glass diffuser	*metal structure*		***€ VATEXCL.***
° WHITE / CLEAR	MATT WHITE	1A63004513001	**1595,00**
* SILVER METALIZED TRANSMIRROR / CLEAR	CHROME	1A63004510171	**1864,50**
* GOLDEN COPPER METALIZED TRANSMIRROR / CLEAR	CHROME	1A63004510170	**1864,50**
* BLACK METALIZED TRANSMIRROR / CLEAR	CHROME	1A63004510105	**1864,50**
* GLORY ROSE METALIZED TRANSMIRROR / CLEAR	CHROME	1A63004510199	**1864,50**
° GOLD LEAF / CLEAR	CHROME	1A63004510198	**1705,00**

LED DIMM (Dali/DSI - SwitchDIM - 1...10V - 0...10V)

glossy glass diffuser	*metal structure*	Dimmable	***€ VATEXCL.***
° WHITE / CLEAR	MATT WHITE	1A63004613001	**1705,00**
* SILVER METALIZED TRANSMIRROR / CLEAR	CHROME	1A63004610171	**1925,00**
* GOLDEN COPPER METALIZED TRANSMIRROR / CLEAR	CHROME	1A63004610170	**1925,00**
* BLACK METALIZED TRANSMIRROR / CLEAR	CHROME	1A63004610105	**1925,00**
* GLORY ROSE METALIZED TRANSMIRROR / CLEAR	CHROME	1A63004610199	**1925,00**
° GOLD LEAF / CLEAR	CHROME	1A63004610198	**1760,00**

LONGER CABLES TO BE QUOTED SEPARATELY

GONG S1 3B/LED 3B

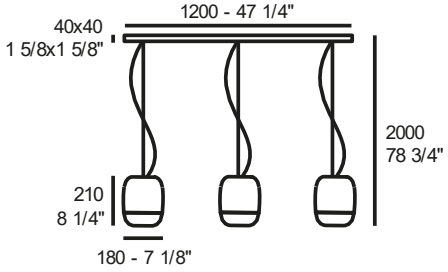

MAX 3x6W LED G9
* **LED 4,2W - 2700K (300lm)**
° **LED 4,8W - 3000K (720lm)**

IP20

Kg **9,2** m³ **0,13** **4**

G9

glossy glass diffuser	*metal structure*		***€ VATEXCL.***
WHITE / CLEAR	MATT WHITE	1A63005813001	**1512,50**
SILVER METALIZED TRANSMIRROR / CLEAR	CHROME	1A63005813071	**1754,50**
GOLDEN COPPER METALIZED TRANSMIRROR / CLEAR	CHROME	1A63005813070	**1754,50**
BLACK METALIZED TRANSMIRROR / CLEAR	CHROME	1A63005813005	**1754,50**
GLORY ROSE METALIZED TRANSMIRROR / CLEAR	CHROME	1A63005813099	**1754,50**
GOLD LEAF / CLEAR	CHROME	1A63005813098	**1633,50**

LED – dimmable trailing edge

glossy glass diffuser	*metal structure*		***€ VATEXCL.***
° WHITE / CLEAR	MATT WHITE	1A63005913001	**1808,95**
* SILVER METALIZED TRANSMIRROR / CLEAR	CHROME	1A63005913071	**2050,95**
* GOLDEN COPPER METALIZED TRANSMIRROR / CLEAR	CHROME	1A63005913070	**2050,95**
* BLACK METALIZED TRANSMIRROR / CLEAR	CHROME	1A63005913005	**2050,95**
* GLORY ROSE METALIZED TRANSMIRROR / CLEAR	CHROME	1A63005913099	**2050,95**
° GOLD LEAF / CLEAR	CHROME	1A63005913098	**1954,15**

LONGER CABLES TO BE QUOTED SEPARATELY

GONG S3/LED S3

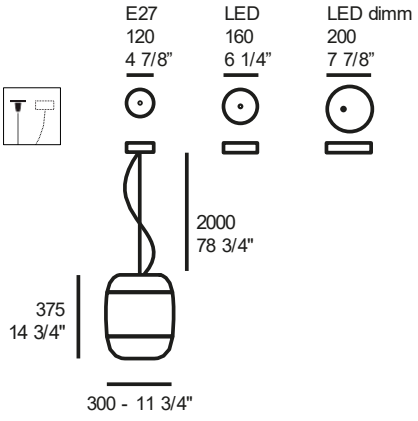

LED E27
LED 8,5W - 3000K (1044lm)

Kg 7,3 | m³ 0,11 | I

2700K available with a surcharge of 3%

E27
glossy glass diffuser

		€ VAT EXCL.
WHITE / WHITE - WHITE INSIDE	1A63003913041	**690,00**
BLACK / BLACK - WHITE INSIDE	1A63003913005	**700,00**
SILVER METALIZED	1A63005013071	**990,00**
GOLDEN COPPER METALIZED	1A63005013070	**990,00**
GLORY ROSE METALIZED	1A63003913099	**990.00**
GOLD LEAF	1A63003913098	**770,00**

LED – dimmable trailing edge
glossy glass diffuser

		€ VAT EXCL.
WHITE / WHITE - WHITE INSIDE	1A63003413041	**990,00**
BLACK / BLACK - WHITE INSIDE	1A63003413005	**1045,00**
SILVER METALIZED	1A63005113071	**1265,00**
GOLDEN COPPER METALIZED	1A63005113070	**1265,00**
GLORY ROSE METALIZED	1A63003413099	**1265,00**
GOLD LEAF	1A63003413098	**1094,50**

LED DIMM (Dali/DSI - SwitchDIM - 1...10V - 0...10V)
glossy glass diffuser

		€ VAT EXCL.
WHITE / WHITE - WHITE INSIDE	1A63003613041	**1045,00**
BLACK / BLACK - WHITE INSIDE	1A63003613005	**1094,50**
SILVER METALIZED	1A63005213071	**1314,50**
GOLDEN COPPER METALIZED	1A63005213070	**1314,50**
GLORY ROSE METALIZED	1A63003613099	**1314,50**
GOLD LEAF	1A63003613098	**1210,00**

LATERAL CEILING ATTACHMENT	6993601500100	**39,60**

GONG S5/LED S5

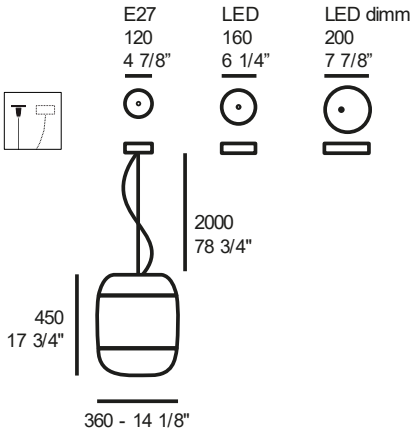

LED E27
LED 13,2W - 3000K (1417lm)

IP20 Dimmable

Kg **8,0** m³ **0,163** l

2700K available with a surcharge of 3%

E27
glossy glass diffuser

		€ VAT EXCL.
WHITE / WHITE - WHITE INSIDE	1A63004013041	**925,00**
BLACK / BLACK - WHITE INSIDE	1A63004013005	**935,00**
SILVER METALIZED	1A63005313071	**1299,00**
GOLDEN COPPER METALIZED	1A63005313070	**1299,00**
GLORY ROSE METALIZED	1A63004013099	**1299,00**
GOLD LEAF	1A63004013098	**975,00**

LED – dimmable trailing edge
glossy glass diffuser

		€ VAT EXCL.
WHITE / WHITE - WHITE INSIDE	1A63003513041	**1100,00**
BLACK / BLACK - WHITE INSIDE	1A63003513005	**1155,00**
SILVER METALIZED	1A63005413071	**1424,50**
GOLDEN COPPER METALIZED	1A63005413070	**1424,50**
GLORY ROSE METALIZED	1A63003513099	**1424,50**
GOLD LEAF	1A63003513098	**1265,00**

LED DIMM (Dali/DSI - SwitchDIM - 1...10V - 0...10V)
glossy glass diffuser

	Dimmable	***€ VAT EXCL.***
WHITE / WHITE - WHITE INSIDE	1A63003713041	**1210,00**
BLACK / BLACK - WHITE INSIDE	1A63003713005	**1256,00**
SILVER METALIZED	1A63005513071	**1441,00**
GOLDEN COPPER METALIZED	1A63005513070	**1441,00**
GLORY ROSE METALIZED	1A63003713099	**1441,00**
GOLD LEAF	1A63003713098	**1320,00**

LATERAL CEILING ATTACHMENT	6993601500100	**39,60**

GONG T1

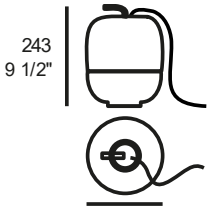

LED G9

1,4 | 0,031

dimmer on cable — mm 2100

glossy glass diffuser	*structure*		*€ VAT EXCL.*
WHITE with white fabric cable	MATT WHITE	1A64000113001	**450,00**
SILVER METALIZED TRANSMIRROR with black fabric cable	MATT BLACK	1A64000113571	**520,00**
GOLDEN COPPER METALIZED TRANSMIRROR with black fabric cable	MATT BLACK	1A64000113570	**520,00**
GLORY ROSE METALIZED TRANSMIRROR with black fabric cable	MATT BLACK	1A64000113599	**520,00**
GOLD LEAF with black fabric cable	MATT BLACK	1A64000113598	**490,00**

GONG T3

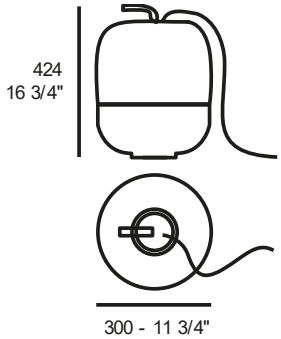

LED E27

6,2 | 0,11

dimmer on cable — mm 2000

glossy glass diffuser	*structure*	*white fabric cable*	*red fabric cable*	*€ VAT EXCL.*
WHITE - WHITE INSIDE	MATT WHITE	1A64000413001	1A64000213001	**650,00**
SILVER METALIZED	MATT BLACK	—	1A64000213571	**900,00**
GOLDEN COPPER METALIZED	MATT BLACK	—	1A64000213570	**900,00**
GLORY ROSE METALIZED	MATT WHITE	1A64000413599	—	**900,00**
GOLD LEAF	MATT WHITE	1A64000413098	—	**700,00**

GONG W1/LED W1

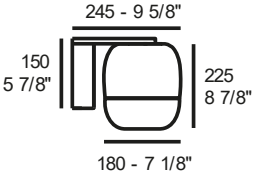

MAX 1x6W LED G9

LED 4W - 3000K (720lm)

2,2 | 0,11

G9

blown glass diffuser	*metal structure*		*€ VAT EXCL.*
WHITE / CLEAR	MATT WHITE	1C40000113001	**485,00**
WHITE / CLEAR	CHROME	1C40000110101	**532,50**
WHITE / CLEAR	HERITAGE BRASS	1C40000111201	**532,50**
SILVER METALIZED TRANSMIRROR / CLEAR	MATT WHITE	1C40000113071	**543,50**
GOLDEN COPPER METALIZED TRANSMIRROR / CLEAR	MATT WHITE	1C40000113070	**543,50**
BLACK METALIZED TRANSMIRROR / CLEAR	HERITAGE BRASS	1C40000111205	**585,50**
GLORY ROSE METALIZED TRANSMIRROR / CLEAR	MATT WHITE	1C40000113099	**543,50**
GOLD LEAF / CLEAR	MATT WHITE	1C40000113098	**485,00**

LED – dimmable trailing edge

blown glass diffuser	*metal structure*		*€ VAT EXCL.*
WHITE / CLEAR	MATT WHITE	1C40000213001	**599,50**
WHITE / CLEAR	CHROME	1C40000210101	**631,50**
WHITE / CLEAR	HERITAGE BRASS	1C40000211201	**631,50**
GOLD LEAF / CLEAR	MATT WHITE	1C40000213098	**599,50**

PATENT PENDING

GONG MINI CANOPY S1/LED S1

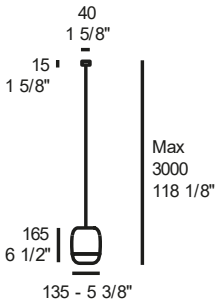

MAX 1x20W G4

LED 4,2W - 2700K (300lm)

Kg 1,3 | m³ 0,018

Black rubber cable

3000K available with a surcharge of 5%

G4

glossy glass diffuser	*structure*		*€ VAT EXCL.*
WHITE / CLEAR	ANODIZED ALUMINIUM	1A63000710001	**335,00**
SILVER METALIZED TRANSMIRROR / CLEAR	ANODIZED ALUMINIUM	1A63000710071	**430,00**
GOLDEN COPPER METALIZED TRANSMIRROR / CLEAR	ANODIZED ALUMINIUM	1A63000710070	**430,00**
BLACK METALIZED TRANSMIRROR / CLEAR	ANODIZED ALUMINIUM	1A63000710005	**430,00**
GLORY ROSE METALIZED TRANSMIRROR / CLEAR	ANODIZED ALUMINIUM	1A63000710099	**430,00**
GOLD LEAF / CLEAR	ANODIZED ALUMINIUM	1A63000710098	**375,00**
ON REQUEST - transformer		6303401400000	**64,90**

LED – dimmable trailing edge

glossy glass diffuser	*painted metal structure*		*€ VAT EXCL.*
WHITE / CLEAR	MATT WHITE	1A63002113001	**470,00**
SILVER METALIZED TRANSMIRROR / CLERA	MATT SILVER	1A63002113071	**555,00**
GOLDEN COPPER METALIZED TRANSMIRROR / CLEAR	MATT SILVER	1A63002113070	**555,00**
BLACK METALIZED TRANSMIRROR / CLEAR	MATT SILVER	1A63002113005	**555,00**
GLORY ROSE METALIZED TRANSMIRROR / CLEAR	MATT SILVER	1A63002113099	**555,00**
GOLD LEAF / CLEAR	MATT SILVER	1A63002113098	**505,00**

CONVERTER INCLUDED (FOR REMOTE INSTALLATION)

GONG MINI S1/LED S1

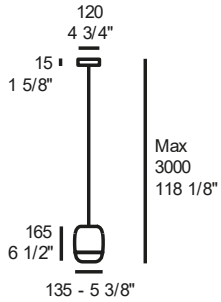

MAX 1x20W G4

LED 4,2W - 2700K (300lm)

Kg 1,3 | m³ 0,018

Black rubber cable

3000K available with a surcharge of 5%

G4

glossy glass diffuser	*structure*		*€ VAT EXCL.*
WHITE / CLEAR	ANODIZED ALUMINIUM	1A63000813001	**415,00**
SILVER METALIZED TRANSMIRROR / CLEAR	ANODIZED ALUMINIUM	1A63000813071	**510,00**
GOLDEN COPPER METALIZED TRANSMIRROR / CLEAR	ANODIZED ALUMINIUM	1A63000813070	**510,00**
BLACK METALIZED TRANSMIRROR / CLEAR	ANODIZED ALUMINIUM	1A63000813005	**510,00**
GLORY ROSE METALIZED TRANSMIRROR / CLEAR	ANODIZED ALUMINIUM	1A63000813099	**510,00**
GOLD LEAF / CLEAR	ANODIZED ALUMINIUM	1A63000813098	**455,00**

LED – dimmable trailing edge

glossy glass diffuser	*painted metal structure*		*€ VAT EXCL.*
WHITE / CLEAR	MATT WHITE	1A63002013001	**540,00**
SILVER METALIZED TRANSMIRROR / CLEAR	MATT SILVER	1A63002013071	**610,00**
GOLDEN COPPER METALIZED TRANSMIRROR / CLEAR	MATT SILVER	1A63002013070	**610,00**
BLACK METALIZED TRANSMIRROR / CLEAR	MATT SILVER	1A63002013005	**610,00**
GLORY ROSE METALIZED TRANSMIRROR / CLEAR	MATT SILVER	1A63002013099	**610,00**
GOLD LEAF / CLEAR	MATT SILVER	1A63002013098	**565,00**

GONG MINI S1L/LED S1L

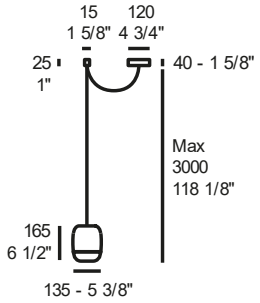

MAX 1x20W HSGT G4

LED 4,2W - 2700K (300lm)

IP20 Dimmable

Kg 1,4 | m³ 0,018 | I

Black rubber cable

3000K available with a surcharge of 5%

G4

glossy glass diffuser	*structure*		***€ VAT EXCL.***
WHITE / CLEAR	ANODIZED ALUMINIUM	1A63000913001	**440,00**
SILVER METALIZED TRANSMIRROR / CLEAR	ANODIZED ALUMINIUM	1A63000913071	**535,00**
GOLDEN COPPER METALIZED TRANSMIRROR / CLEAR	ANODIZED ALUMINIUM	1A63000913070	**535,00**
BLACK METALIZED TRANSMIRROR / CLEAR	ANODIZED ALUMINIUM	1A63000913005	**535,00**
GLORY ROSE METALIZED / CLEAR	ANODIZED ALUMINIUM	1A63000913099	**535,00**
GOLD LEAF / CLEAR	ANODIZED ALUMINIUM	1A63000913098	**470,00**

LED – trailing edge dimmable

glossy glass diffuser	*painted metal structure*		***€ VAT EXCL.***
WHITE / CLEAR	MATT WHITE	1A63002213001	**550,00**
SILVER METALIZED TRANSMIRROR / CLEAR	MATT SILVER	1A63002213071	**630,00**
GOLDEN COPPER METALIZED TRANSMIRROR / CLEAR	MATT SILVER	1A63002213070	**630,00**
BLACK METALIZED TRANSMIRROR / CLEAR	MATT SILVER	1A63002213005	**630,00**
GLORY ROSE METALIZED / CLEAR	MATT SILVER	1A63002213099	**630,00**
GOLD LEAF / CLEAR	MATT SILVER	1A63002213098	**580,00**

GONG MINI 2L-5L/LED 2L-5L

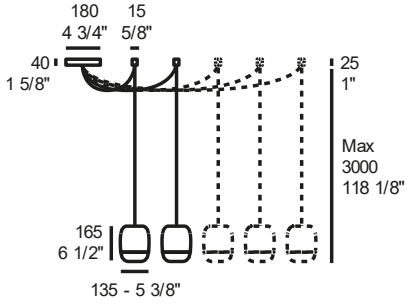

MAX 1x20W G4

LED 4,2W - 2700K (300lm)

IP20 Dimmable

Kg 3,1 | m³ 0,048 | 3

Black rubber cable

3000K available with a surcharge of 5%

G4

glossy glass diffuser	*structure*	*2 LAMPS*	***€ VAT EXCL.***	*ADDITIONAL LAMP (MAX 5 LAMPS ALTOGETHER)*	***€ VAT EXCL.***
WHITE / CLEAR	ANODIZED ALUMINIUM	1A63001013001	**785,00**	2A62000110001	**308,00**
SILVER METALIZED TRANSMIRROR / CLEAR	ANODIZED ALUMINIUM	1A63001013071	**945,00**	2A62000110071	**385,00**
GOLDEN COPPER METALIZED TRANSMIRROR / CLEAR	ANODIZED ALUMINIUM	1A63001013070	**945,00**	2A62000110070	**385,00**
BLACK METALIZED TRANSMIRROR / CLEAR	ANODIZED ALUMINIUM	1A63001013005	**945,00**	2A62000110005	**385,00**
GLORY ROSE METALIZED TRANSMIRROR / CLEAR	ANODIZED ALUMINIUM	1A63001013099	**945,00**	2A62000110099	**385,00**
GOLD LEAF / CLEAR	ANODIZED ALUMINIUM	1A63001013098	**865,00**	2A62000110098	**335,50**

UP TO 5 SUSPENSIONS: TO BE QUOTED ON REQUEST

LED – dimmable trailing edge

glossy glass diffuser	*painted metal structure*	*2 LAMPS*	***€ VAT EXCL.***	*ADDITIONAL LAMP (MAX 5 LAMPS ALTOGETHER)*	***€ VAT EXCL.***
WHITE / CLEAR	MATT WHITE	1A63002313001	**1030,00**	2A62000810001	**423,50**
SILVER METALIZED TRANSMIRROR / CLEAR	MATT SILVER	1A63002313071	**1165,00**	2A62000810071	**495,00**
GOLDEN COPPER METALIZED TRANSMIRROR / CLEAR	MATT SILVER	1A63002313070	**1165,00**	2A62000810070	**495,00**
BLACK METALIZED TRANSMIRROR / CLEAR	MATT SILVER	1A63002313005	**1165,00**	2A62000810005	**495,00**
GLORY ROSE METALIZED TRANSMIRROR / CLEAR	MATT SILVER	1A63002313099	**1165,00**	2A62000810099	**495,00**
GOLD LEAF / CLEAR	MATT SILVER	1A63002313098	**1070,00**	2A62000810098	**445,50**

UP TO 5 SUSPENSIONS: TO BE QUOTED ON REQUEST

GONG MINI 3R-3S/LED 3R-3S

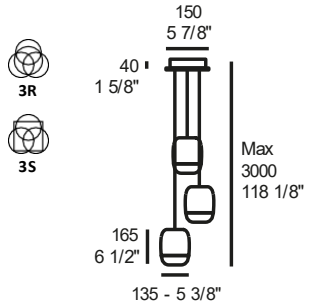

MAX 1x20W G4

LED 4,2W - 2700K (300lm)

Black rubber cable

3000K available with a surcharge of 5%

Kg **5,2** m³ **0,066** **4**

G4 - 3R (round ceiling rose)

glossy glass diffuser	*structure*		***€ VAT EXCL.***
WHITE / CLEAR	ANODIZED ALUMINIUM	1A63001113001	**1100,00**
SILVER METALIZED TRANSMIRROR / CLEAR	ANODIZED ALUMINIUM	1A63001113071	**1365,00**
GOLDEN COPPER METALIZED TRANSMIRROR / CLEAR	ANODIZED ALUMINIUM	1A63001113070	**1365,00**
BLACK METALIZED TRANSMIRROR / CLEAR	ANODIZED ALUMINIUM	1A63001113005	**1365,00**
GLORY ROSE METALIZED TRANSMIRROR / CLEAR	ANODIZED ALUMINIUM	1A63001113099	**1365,00**
GOLD LEAF / CLEAR	ANODIZED ALUMINIUM	1A63001113098	**1175,00**

LED - 3R (dimmable trailing edge – round ceilinge rose)

glossy glass diffuser	*painted metal structure*		***€ VAT EXCL.***
WHITE / CLEAR	MATT WHITE	1A63002413001	**1485,00**
SILVER METALIZED TRANSMIRROR / CLEAR	MATT SILVER	1A63002413071	**1655,50**
GOLDEN COPPER METALIZED TRANSMIRROR / CLEAR	MATT SILVER	1A63002413070	**1655,50**
BLACK METALIZED TRANSMIRROR / CLEAR	MATT SILVER	1A63002413005	**1655,50**
GLORY ROSE METALIZED TRANSMIRROR / CLEAR	MATT SILVER	1A63002413099	**1655,50**
GOLD LEAF / CLEAR	MATT SILVER	1A63002413098	**1545,00**

G4 - 3S (squared ceiling rose)

glossy glass diffuser	*structure*		***€ VAT EXCL.***
WHITE / CLEAR	ANODIZED ALUMINIUM	1A63001213001	**1110,00**
SILVER METALIZED TRANSMIRROR / CLEAR	ANODIZED ALUMINIUM	1A63001213071	**1365,00**
GOLDEN COPPER METALIZED TRANSMIRROR / CLEAR	ANODIZED ALUMINIUM	1A63001213070	**1365,00**
BLACK METALIZED TRANSMIRROR / CLEAR	ANODIZED ALUMINIUM	1A63001213005	**1365,00**
GLORY ROSE METALIZED TRANSMIRROR / CLEAR	ANODIZED ALUMINIUM	1A63001213099	**1365,00**
GOLD LEAF / CLEAR	ANODIZED ALUMINIUM	1A63001213098	**1175,00**

LED - 3S (dimmable trailing edge – squared ceiling rose)

glossy glass diffuser	*painted metal structure*		***€ VAT EXCL.***
WHITE / CLEAR	MATT WHITE	1A63002513001	**1485,00**
SILVER METALIZED TRANSMIRROR / CLEAR	MATT SILVER	1A63002513071	**1655,50**
GOLDEN COPPER METALIZED TRANSMIRROR / CLEAR	MATT SILVER	1A63002513070	**1655,50**
BLACK METALIZED TRANSMIRROR / CLEAR	MATT SILVER	1A63002513005	**1655,50**
GLORY ROSE METALIZED TRANSMIRROR / CLEAR	MATT SILVER	1A63002513099	**1655,50**
GOLD LEAF / CLEAR	MATT SILVER	1A63002513098	**1545,00**

LONGER CABLES TO BE QUOTED SEPARATELY

GONG MINI 5R-5S/LED 5R-5S

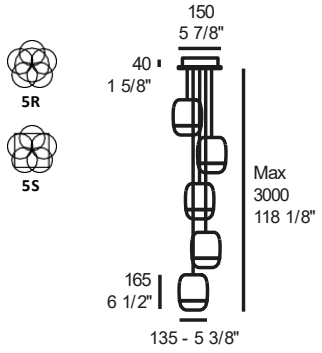

MAX 1x20W G4

LED 4,2W - 2700K (300lm)

Black rubber cable

IP20 Dimmable

Kg 7,8 | m³ 0,103 | 6

3000K available with a surcharge of 5%

G4 - 5R (round ceiling rose)

glossy glass diffuser	*structure*		*€ VAT EXCL.*
WHITE / CLEAR	ANODIZED ALUMINIUM	1A63001313001	**1725,00**
SILVER METALIZED TRANSMIRROR / CLEAR	ANODIZED ALUMINIUM	1A63001313071	**2125,00**
GOLDEN COPPER METALIZED TRANSMIRROR / CLEAR	ANODIZED ALUMINIUM	1A63001313070	**2125,00**
BLACK METALIZED TRANSMIRROR / CLEAR	ANODIZED ALUMINIUM	1A63001313005	**2125,00**
GLORY ROSE METALIZED TRANSMIRROR / CLEAR	ANODIZED ALUMINIUM	1A63001313099	**2125,00**
GOLD LEAF / CLEAR	ANODIZED ALUMINIUM	1A63001313098	**1900,00**

LED - 5R (dimmable trailing edge - round ceiling rose)

glossy glass diffuser	*painted metal structure*		*€ VAT EXCL.*
WHITE / CLEAR	MATT WHITE	1A63002613001	**2370,50**
SILVER METALIZED TRANSMIRROR / CLEAR	MATT SILVER	1A63002613071	**2725,50**
GOLDEN COPPER METALIZED TRANSMIRROR / CLEAR	MATT SILVER	1A63002613070	**2725,50**
BLACK METALIZED TRANSMIRROR / CLEAR	MATT SILVER	1A63002613005	**2725,50**
GLORY ROSE METALIZED TRANSMIRROR / CLEAR	MATT SILVER	1A63002613099	**2725,50**
GOLD LEAF / CLEAR	MATT SILVER	1A63002613098	**2555,00**

G4 - 5S (squared ceiling rose)

glossy glass diffuser	*structure*		*€ VAT EXCL.*
WHITE / CLEAR	ANODIZED ALUMINIUM	1A63001413001	**1725,00**
SILVER METALIZED TRANSMIRROR / CLEAR	ANODIZED ALUMINIUM	1A63001413071	**2125,00**
GOLDEN COPPER METALIZED TRANSMIRROR / CLEAR	ANODIZED ALUMINIUM	1A63001413070	**2125,00**
BLACK METALIZED TRANSMIRROR / CLEAR	ANODIZED ALUMINIUM	1A63001413005	**2125,00**
GLORY ROSE METALIZED TRANSMIRROR / CLEAR	ANODIZED ALUMINIUM	1A63001413099	**2125,00**
GOLD LEAF / CLEAR	ANODIZED ALUMINIUM	1A63001413098	**1900,00**

LED - 5S (dimmable trailing edge – squared ceiling rose)

glossy glass diffuser	*painted metal structure*		*€ VAT EXCL.*
WHITE / CLEAR	MATT WHITE	1A63002713001	**2370,50**
SILVER METALIZED TRANSMIRROR / CLEAR	MATT SILVER	1A63002713071	**2725,50**
GOLDEN COPPER METALIZED TRANSMIRROR / CLEAR	MATT SILVER	1A63002713070	**2725,50**
BLACK METALIZED TRANSMIRROR / CLEAR	MATT SILVER	1A63002713005	**2725,50**
GLORY ROSE METALIZED TRANSMIRROR / CLEAR	MATT SILVER	1A63002713099	**2725,50**
GOLD LEAF / CLEAR	MATT SILVER	1A63002713098	**2555,00**

LONGER CABLES TO BE QUOTED SEPARATELY

GONG MINI 7R-7S/LED 7R-7S

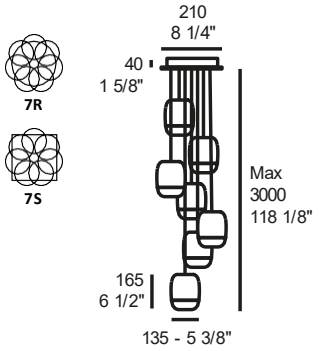

MAX 1x20W G4

LED 4,2W - 2700K (300lm)

Black rubber cable

Kg 11,1 | m³ 0,156 | 8

3000K available with a surcharge of 5%

G4 - 7R (round ceiling rose)

glossy glass diffuser	*structure*		***€ VATEXCL.***
WHITE / CLEAR	ANODIZED ALUMINIUM	1A63001513001	**2370,00**
SILVER METALIZED TRANSMIRROR / CLEAR	ANODIZED ALUMINIUM	1A63001513071	**2965,00**
GOLDEN COPPER METALIZED TRANSMIRROR / CLEAR	ANODIZED ALUMINIUM	1A63001513070	**2965,00**
BLACK METALIZED TRANSMIRROR / CLEAR	ANODIZED ALUMINIUM	1A63001513005	**2965,00**
GLORY ROSE METALIZED TRANSMIRROR / CLEAR	ANODIZED ALUMINIUM	1A63001513099	**2965,00**
GOLD LEAF / CLEAR	ANODIZED ALUMINIUM	1A63001513098	**2555,00**

LED - 7R (dimmable trailing edge – round ceiling rose)

glossy glass diffuser	*painted metal structure*		***€ VATEXCL.***
WHITE / CLEAR	MATT WHITE	1A63002813001	**3265,00**
SILVER METALIZED TRANSMIRROR / CLEAR	MATT SILVER	1A63002813071	**3750,00**
GOLDEN COPPER METALIZED TRANSMIRROR / CLEAR	MATT SILVER	1A63002813070	**3750,00**
BLACK METALIZED TRANSMIRROR / CLEAR	MATT SILVER	1A63002813005	**3750,00**
GLORY ROSE METALIZED TRANSMIRROR / CLEAR	MATT SILVER	1A63002813099	**3750,00**
GOLD LEAF / CLEAR	MATT SILVER	1A63002813098	**3450,00**

G4 - 7S (squared ceiling rose)

glossy glass diffuser	*structure*		***€ VATEXCL.***
WHITE / CLEAR	ANODIZED ALUMINIUM	1A63001613001	**2370,00**
SILVER METALIZED TRANSMIRROR / CLEAR	ANODIZED ALUMINIUM	1A63001613071	**2965,00**
GOLDEN COPPER METALIZED TRANSMIRROR / CLEAR	ANODIZED ALUMINIUM	1A63001613070	**2965,00**
BLACK METALIZED TRANSMIRROR / CLEAR	ANODIZED ALUMINIUM	1A63001613005	**2965,00**
GLORY ROSE METALIZED TRANSMIRROR / CLEAR	ANODIZED ALUMINIUM	1A63001613099	**2965,00**
GOLD LEAF / CLEAR	ANODIZED ALUMINIUM	1A63001613098	**2555,00**

LED - 7S (dimmable trailing edge – squared ceiling rose)

glossy glass diffuser	*painted metal structure*		***€ VATEXCL.***
WHITE / CLEAR	MATT WHITE	1A63002913001	**3265,00**
SILVER METALIZED TRANSMIRROR / CLEAR	MATT SILVER	1A63002913071	**3750,00**
GOLDEN COPPER METALIZED TRANSMIRROR / CLEAR	MATT SILVER	1A63002913070	**3750,00**
BLACK METALIZED TRANSMIRROR / CLEAR	MATT SILVER	1A63002913005	**3750,00**
GLORY ROSE METALIZED TRANSMIRROR / CLEAR	MATT SILVER	1A63002913099	**3750,00**
GOLD LEAF / CLEAR	MATT SILVER	1A63002913098	**3450,00**

LONGER CABLES TO BE QUOTED SEPARATELY

GONG MINI 9R-9S/LED 9R-9S

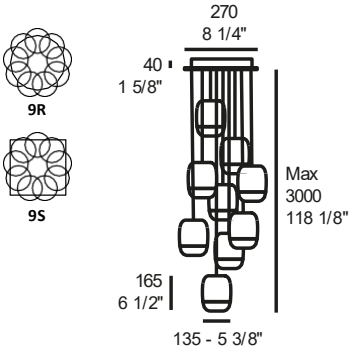

MAX 1x20W G4

LED 4,2W - 2700K (300lm)

Black rubber cable

14,3 | 0,193 | 10

3000K available with a surcharge of 5%

G4 - 9R (round ceiling rose)

glossy glass diffuser	*structure*		*€ VAT EXCL.*
WHITE / CLEAR	ANODIZED ALUMINIUM	1A63001713001	**3050,00**
SILVER METALIZED TRANSMIRROR / CLEAR	ANODIZED ALUMINIUM	1A63001713071	**3800,00**
GOLDEN COPPER METALIZED TRANSMIRROR / CLEAR	ANODIZED ALUMINIUM	1A63001713070	**3800,00**
BLACK METALIZED TRANSMIRROR / CLEAR	ANODIZED ALUMINIUM	1A63001713005	**3800,00**
GLORY ROSE METALIZED TRANSMIRROR / CLEAR	ANODIZED ALUMINIUM	1A63001713099	**3800,00**
GOLD LEAF / CLEAR	ANODIZED ALUMINIUM	1A63001713098	**3445,00**

LED - 9R (dimmable trailing edge – round ceiling rose)

glossy glass diffuser	*painted metal structure*		*€ VAT EXCL.*
WHITE / CLEAR	MATT WHITE	1A63003013001	**4220,00**
SILVER METALIZED TRANSMIRROR / CLEAR	MATT SILVER	1A63003013071	**4750,00**
GOLDEN COPPER METALIZED TRANSMIRROR / CLEAR	MATT SILVER	1A63003013070	**4750,00**
BLACK METALIZED TRANSMIRROR / CLEAR	MATT SILVER	1A63003013005	**4750,00**
GLORY ROSE METALIZED TRANSMIRROR / CLEAR	MATT SILVER	1A63003013099	**4750,00**
GOLD LEAF / CLEAR	MATT SILVER	1A63003013098	**4395,00**

G4 - 9S (squared ceiling rose)

glossy glass diffuser	*structure*		*€ VAT EXCL.*
WHITE / CLEAR	ANODIZED ALUMINIUM	1A63001813001	**3050,00**
SILVER METALIZED TRANSMIRROR / CLEAR	ANODIZED ALUMINIUM	1A63001813071	**3800,00**
GOLDEN COPPER METALIZED TRANSMIRROR / CLEAR	ANODIZED ALUMINIUM	1A63001813070	**3800,00**
BLACK METALIZED TRANSMIRROR / CLEAR	ANODIZED ALUMINIUM	1A63001813005	**3800,00**
GLORY ROSE METALIZED TRANSMIRROR / CLEAR	ANODIZED ALUMINIUM	1A63001813099	**3800,00**
GOLD LEAF / CLEAR	ANODIZED ALUMINIUM	1A63001813098	**3445,00**

LED - 9S (dimmable trailing edge – squared ceiling rose)

glossy glass diffuser	*painted metal structure*		*€ VAT EXCL.*
WHITE / CLEAR	MATT WHITE	1A63003113001	**4220,00**
SILVER METALIZED TRANSMIRROR / CLEAR	MATT SILVER	1A63003113071	**4750,00**
GOLDEN COPPER METALIZED TRANSMIRROR / CLEAR	MATT SILVER	1A63003113070	**4750,00**
BLACK METALIZED TRANSMIRROR / CLEAR	MATT SILVER	1A63003113005	**4750,00**
GLORY ROSE METALIZED TRANSMIRROR / CLEAR	MATT SILVER	1A63003113099	**4750,00**
GOLD LEAF / CLEAR	MATT SILVER	1A63003113098	**4395,00**

LONGER CABLES TO BE QUOTED SEPARATELY

EXAMPLES OF GONG MINI COMPOSITIONS

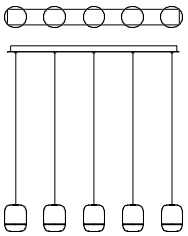

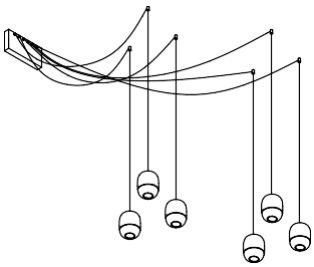

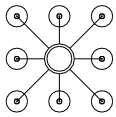

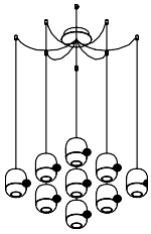

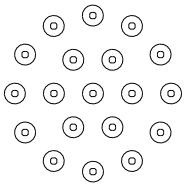

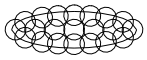

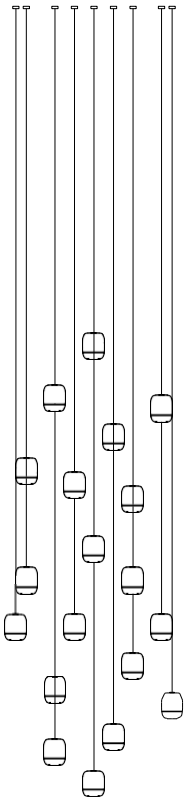

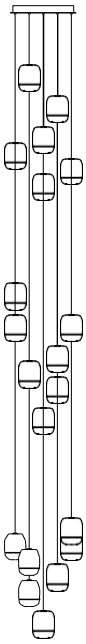

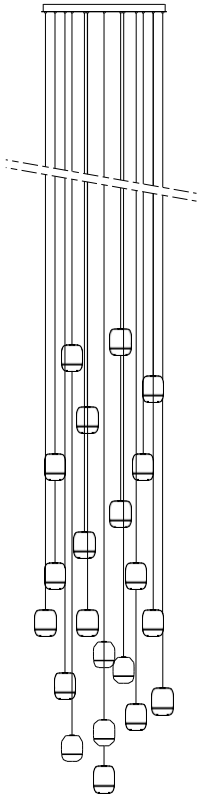

Landing

DESIGN BY
SERGIO PRANDINA 2017

PATENT PENDING

LANDING S1

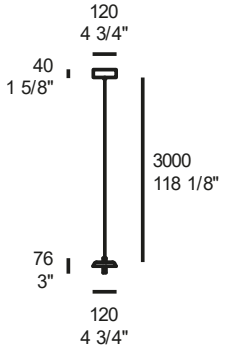

LED 4,8W - 3000K (720lm)

Dimmable trailing edge

Kg 1,2 | m³ 0,018 | I

2700K available with a surcharge of 3%

methacrylate diffuser, rubber cable	*matt white painted metal*	*matt black painted metal*	***€ VAT EXCL.***
OPAL WHITE	1C23000113000	1C23000113500	**330,00**

LANDING S1L

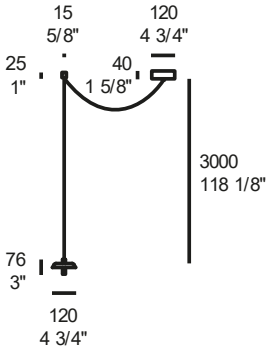

LED 4,8W - 3000K (720lm)

Dimmable trailing edge

Kg 1,2 | m³ 0,018 | I

2700K available with a surcharge of 3%

methacrylate diffuser, rubber cable	*matt white painted metal*	*matt black painted metal*	***€ VAT EXCL.***
OPAL WHITE	1C23000213000	1C23000213500	**350,00**

LANDING S1 2L

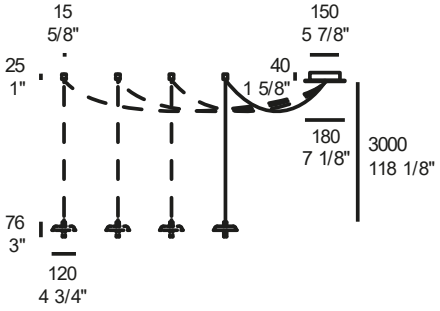

LED 4,8W - 3000K (720lm)

Dimmable trailing edge

Kg 3,1 | m³ 0,048 | 2

2700K available with a surcharge of 3%

methacrylate diffuser, rubber cable	*painted metal structure*	*2 LAMPS*	***€ VAT EXCL.***	*ADDITIONAL LAMP (MAX 5 LAMPS ALTOGETHER)*	***€ VAT EXCL.***
OPAL WHITE	MATT WHITE	1C23000313000	**650,00**	2C22000113000	**374,00**
OPAL WHITE	MATT BLACK	1C23000313500	**650,00**	2C22000113500	**374,00**

UP TO 5 SUSPENSIONS: TO BE QUOTED ON REQUEST

LANDING S70

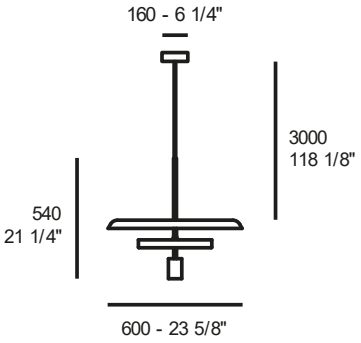

LED 24W + LED 6W – 3000K (4476lm + 770lm)

Dimmable trailing edge

Kg 13,5 | m³ 0,159 | 2

2700K available with a surcharge of 3%

metal diffuser	*matt white painted metal*	*€ VAT EXCL.*	*matt black painted metal*	*€ VAT EXCL.*
MATT WHITE PAINTED	1C23000913031	**1290,00**		
MATT BLACK PAINTED			1C23000913505	**1290,00**
CHROME GALVANIZED	1C23000913015	**1290,00**		
BRASS GALVANIZED	1C23000913016	**1290,00**		

DALI DIMMABLE LED VERSION AVAILABLE ON REQUEST **+98,00**

LANDING GLASS S70

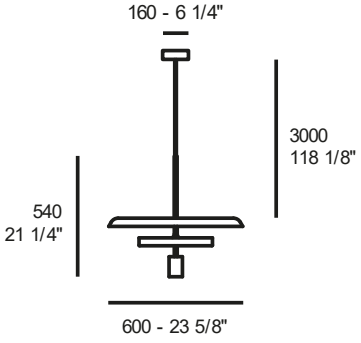

LED 24W + LED 6W – 3000K (4476lm + 770lm)

Dimmable trailing edge

Kg 13,5 | m³ 0,159 | I

2700K available with a surcharge of 3%

sandblasted glass diffuser	*matt white painted metal*	*€ VAT EXCL.*
OPAL WHITE	1C23001013001	**1250,00**

DALI DIMMABLE LED VERSION AVAILABLE ON REQUEST **+98,00**

LANDING T3

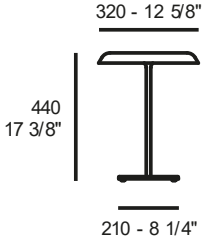

LED 14,2W - 3000K (2485lm)

dimmer on cable

Kg 6,2 | m³ 0,06 | I

2700K available with a surcharge of 3%

methacrylate diffuser	*matt white painted metal white fabric cable*	*matt black painted metal black fabric cable*	*€ VAT EXCL.*
OPAL WHITE	1C24000213031	1C24000213505	**645,00**

Led Machine

DESIGN BY
SERGIO PRANDINA 2017

PATENT PENDING

LED MACHINE S3

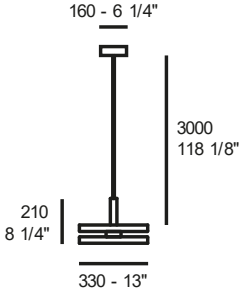

LED 14,2W + LED 14,2W - 3000K
(2485lm + 2485lm)

Dimmable trailing edge

Kg 6,5 | m³ 0,124 | I

2700K available with a surcharge of 3%

	matt white painted metal, white fabric-covered power cable	*matt black painted metal, black fabric-covered power cable*	***€ VAT EXCL.***
OPAL WHITE	1C33000113031	1C33000113505	**1150,00**

LED MACHINE S30

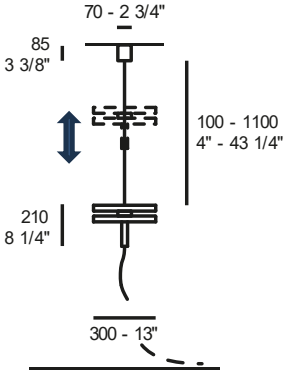

LED 14,2W + LED 14,2W - 3000K
(2485lm + 2485lm)

Kg 7,0 | m³ 0,124 | I

dimmer on cable, up&down adjustable

2700K available with a surcharge of 3%

	matt white painted metal, white fabric cable	*matt black painted metal, black fabric cable*	***€ VAT EXCL.***
OPAL WHITE	1C33000313031	1C33000313505	**1200,00**

LED MACHINE F3

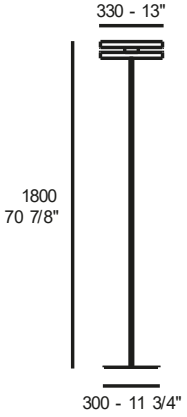

LED 14,2W + LED 14,2W - 3000K
(2485lm + 2485lm)

Kg 20,8 | m³ 0,476 | 2

dimmer on cable — **mm 2800**

2700K available with a surcharge of 3%

	matt white painted metal, white fabric cable	*matt black painted metal, black fabric cable*	***€ VAT EXCL.***
OPAL WHITE	1C32000213031	1C32000213505	**1290,00**

LEMBO LED W1

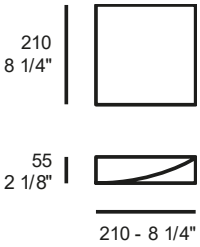

LED 15,3W - 3000K (1800lm)

Kg 1,8 | m³ 0,014

2700K available with a surcharge of 3%

painted polyurethane body - – dimmable trailing edge

		€ VAT EXCL.
MATT WHITE	1995000913001	**275,00**
GLOSSY WHITE	1995000914501	**275,00**

LEMBO LED WW1

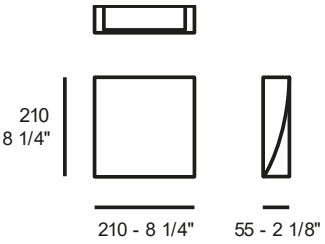

LED 14,4W - 3000K (1060lm)

Kg 2,0 | m³ 0,014

2700K available with a surcharge of 3%

painted polyurethane body – dimmable trailing edge

		€ VAT EXCL.
MATT WHITE	1995000413001	**400,00**
GLOSSY WHITE	1995000414501	**400,00**

LEMBO LED W3

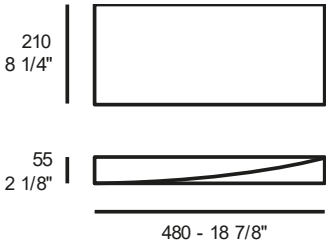

LED 30,6W - 3000K (3600lm)

Kg 2,9 | m³ 0,027 | I

2700K available with a surcharge of 3%

painted polyurethane body – dimmable trailing edge

		€ VATEXCL.
MATT WHITE	1995001013001	**390,00**
GLOSSY WHITE	1995001014501	**390,00**

LEMBO LED WW3

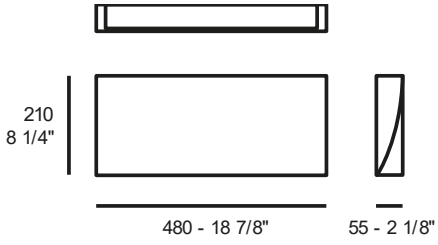

LED 30,6W - 3000K (3600lm)

Kg 2,9 | m³ 0,027 | I

2700K available with a surcharge of 3%

painted polyurethane body – dimmable trailing edge

		€ VATEXCL.
MATT WHITE	1995000613001	**305,00**
GLOSSY WHITE	1995000614501	**305,00**

LIN W1

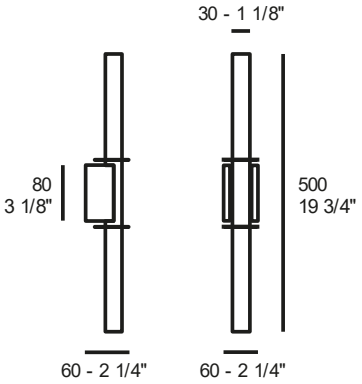

LED 1x6W DRL-DE S14d
(NOT INCLUDED)

IP20

Kg **0,6** m³ **0,026**

crystal support		***€ VAT EXCL.***
CLEAR CRYSTAL	1235000510001	**176,00**

LED Linestra 6W – 3000 Kelvin		***€ VAT EXCL.***
MATT WHITE COVER	0000000000000	**45,00**

DIFFERENT BULBS AVAILABLE ON REQUEST AND UPON AVAILABILITY

LUISA S1 NO DIMM

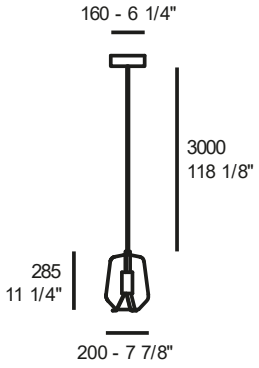

LED 8W – 2700K (717lm)
CRI>90

IP20

Kg 4,3 | m³ 0,07 | I

Blown glass diffuser, MATT WHITE PAINTED METAL STRUCTURE with white cable

		€ VATEXCL.
CLEAR	1C51000113020	**698,50**
GLOSSY WHITE	1C51000113001	**742,50**
GLOSSY SMOKED GREY	1C51000113026	**830,50**
SILVER METALIZED TRANSMIRROR	1C51000113007	**797,50**
GLORY ROSE METALIZED	1C51000113099	**830,50**

Blown glass diffuser, CHROME METAL STRUCTURE with white cable

		€ VATEXCL.
CLEAR	1C51000110120	**764,50**
GLOSSY WHITE	1C51000110101	**808,50**
GLOSSY SMOKED GREY	1C51000110126	**863,50**
SILVER METALIZED TRANSMIRROR	1C51000110107	**896,50**
GLORY ROSE METALIZED	1C51000110199	**896,50**

Blown glass diffuser, HERITAGE BRASS METAL STRUCTURE with white cable

		€ VATEXCL.
CLEAR	1C51000111220	**764,50**
GLOSSY WHITE	1C51000111201	**808,50**
GLOSSY SMOKED GREY	1C51000111226	**863,50**
SILVER METALIZED TRANSMIRROR	1C51000111207	**896,50**
GLORY ROSE METALIZED	1C51000111299	**896,50**

Blown glass diffuser, MATT BLACK PAINTED METAL STRUCTURE with white cable

		€ VATEXCL.
CLEAR	1C51000113520	**698,50**
GLOSSY WHITE	1C51000113501	**742,50**
GLOSSY SMOKED GREY	1C51000113526	**830,50**
SILVER METALIZED TRANSMIRROR	1C51000113507	**797,50**
GLORY ROSE METALIZED	1C51000113599	**830,50**

Blown glass diffuser, NICKEL METAL STRUCTURE with white cable

		€ VATEXCL.
CLEAR	1C51000110420	**742,50**
GLOSSY WHITE	1C51000110401	**786,50**
GLOSSY SMOKED GREY	1C51000110426	**874,50**
SILVER METALIZED TRANSMIRROR	1C51000110407	**841,50**
GLORY ROSE METALIZED	1C51000110499	**874,50**

LUISA S1 DIMM (Dali/DSI - SwitchDIM - 1...10V - 0...10V)

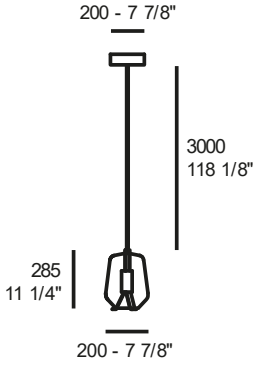

LED 8W - 2700K (717lm)
CRI>90

IP20 Dimmable

Kg 4,3 m³ 0,07 I

Blown glass diffuser, MATT WHITE PAINTED METAL STRUCTURE with white cable — ***€ VATEXCL.***

CLEAR	1C51000513020	**709,50**
GLOSSY WHITE	1C51000513001	**753,50**
GLOSSY SMOKED GREY	1C51000513026	**841,50**
SILVER METALIZED TRANSMIRROR	1C51000513007	**808,50**
GLORY ROSE METALIZED	1C51000513099	**841,50**

Blown glass diffuser, CHROME METAL STRUCTURE with white cable — ***€ VATEXCL.***

CLEAR	1C51000510120	**775,50**
GLOSSY WHITE	1C51000510101	**819,50**
GLOSSY SMOKED GREY	1C51000510126	**907,50**
SILVER METALIZED TRANSMIRROR	1C51000510107	**874,50**
GLORY ROSE METALIZED	1C51000510199	**907,50**

Blown glass diffuser, HERITAGE BRASS METAL STRUCTURE with white cable — ***€ VATEXCL.***

CLEAR	1C51000511220	**775,50**
GLOSSY WHITE	1C51000511201	**819,50**
GLOSSY SMOKED GREY	1C51000511226	**907,50**
SILVER METALIZED TRANSMIRROR	1C51000511207	**874,50**
GLORY ROSE METALIZED	1C51000511299	**907,50**

Blown glass diffuser, MATT BLACK PAINTED METAL STRUCTURE with white cable — ***€ VATEXCL.***

CLEAR	1C51000513520	**709,50**
GLOSSY WHITE	1C51000513501	**753,50**
GLOSSY SMOKED GREY	1C51000513526	**841,50**
SILVER METALIZED TRANSMIRROR	1C51000513507	**808,50**
GLORY ROSE METALIZED	1C51000513599	**841,50**

Blown glass diffuser, NICKEL METAL STRUCTURE with white cable — ***€ VATEXCL.***

CLEAR	1C51000510420	**753,50**
GLOSSY WHITE	1C51000510401	**797,50**
GLOSSY SMOKED GREY	1C51000510426	**885,50**
SILVER METALIZED TRANSMIRROR	1C51000510407	**852,50**
GLORY ROSE METALIZED	1C51000510499	**885,50**

LUISA S3 NO DIMM

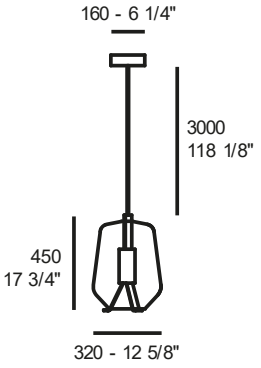

LED 13W - 2700K (1080lm)

IP20

Kg 7,0 | m³ 0,2 | 2

Blown glass diffuser, MATT WHITE PAINTED METAL STRUCTURE with white cable — ***€ VATEXCL.***

CLEAR	1C51000313020	**1155,00**
GLOSSY WHITE	1C51000313001	**1204,50**
GLOSSY SMOKED GREY	1C51000313026	**1320,00**
SILVER METALIZED TRANSMIRROR	1C51000313007	**1298,00**
GLORY ROSE METALIZED	1C51000313099	**1320,00**

Blown glass diffuser, CHROME METAL STRUCTURE with white cable — ***€ VATEXCL.***

CLEAR	1C51000310120	**1243,00**
GLOSSY WHITE	1C51000310101	**1292,50**
GLOSSY SMOKED GREY	1C51000310126	**1408,00**
SILVER METALIZED TRANSMIRROR	1C51000310107	**1386,00**
GLORY ROSE METALIZED	1C51000310199	**1408,00**

Blown glass diffuser, HERITAGE BRASS METAL STRUCTURE with white cable — ***€ VATEXCL.***

CLEAR	1C51000311220	**1243,00**
GLOSSY WHITE	1C51000311201	**1292,50**
GLOSSY SMOKED GREY	1C51000311226	**1408,00**
SILVER METALIZED TRANSMIRROR	1C51000311207	**1386,00**
GLORY ROSE METALIZED	1C51000311299	**1408,00**

Blown glass diffuser, MATT BLACK PAINTED METAL STRUCTURE with white cable — ***€ VATEXCL.***

CLEAR	1C51000313520	**1155,00**
GLOSSY WHITE	1C51000313501	**1204,50**
GLOSSY SMOKED GREY	1C51000313526	**1320,00**
SILVER METALIZED TRANSMIRROR	1C51000313507	**1298,00**
GLORY ROSE METALIZED	1C51000313599	**1320,00**

Blown glass diffuser, NICKEL METAL STRUCTURE with white cable — ***€ VATEXCL.***

CLEAR	1C51000310420	**1243,00**
GLOSSY WHITE	1C51000310401	**1292,50**
GLOSSY SMOKED GREY	1C51000310426	**1408,00**
SILVER METALIZED TRANSMIRROR	1C51000310407	**1386,00**
GLORY ROSE METALIZED	1C51000310499	**1408,00**

LUISA S3 DIMM (Dali/DSI - SwitchDIM - 1...10V - 0...10V)

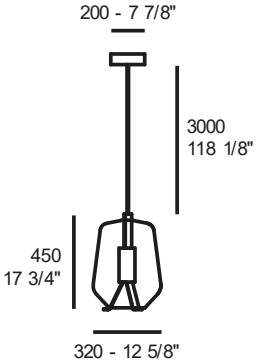

LED 13W - 2700K (1080lm)

IP20 Dimmable

kg 7,0 | m³ 0,2 | 2

Blown glass diffuser, MATT WHITE PAINTED METAL STRUCTURE with white cable — ***€ VATEXCL.***

CLEAR	1C51000713020	**1160,50**
GLOSSY WHITE	1C51000713001	**1210,00**
GLOSSY SMOKED GREY	1C51000713026	**1325,50**
SILVER METALIZED TRANSMIRROR	1C51000713007	**1303,50**
GLORY ROSE METALIZED	1C51000713099	**1325,50**

Blown glass diffuser, CHROME METAL STRUCTURE with white cable — ***€ VATEXCL.***

CLEAR	1C51000710120	**1248,50**
GLOSSY WHITE	1C51000710101	**1298,00**
GLOSSY SMOKED GREY	1C51000710126	**1413,50**
SILVER METALIZED TRANSMIRROR	1C51000710107	**1391,50**
GLORY ROSE METALIZED	1C51000710199	**1413,50**

Blown glass diffuser, HERITAGE BRASS METAL STRUCTURE with white cable — ***€ VATEXCL.***

CLEAR	1C51000711220	**1248,50**
GLOSSY WHITE	1C51000711201	**1298,00**
GLOSSY SMOKED GREY	1C51000711226	**1413,50**
SILVER METALIZED TRANSMIRROR	1C51000711207	**1391,50**
GLORY ROSE METALIZED	1C51000711299	**1413,50**

Blown glass diffuser, MATT BLACK PAINTED METAL STRUCTURE with white cable — ***€ VATEXCL.***

CLEAR	1C51000713520	**1160,50**
GLOSSY WHITE	1C51000713501	**1210,00**
GLOSSY SMOKED GREY	1C51000713526	**1325,50**
SILVER METALIZED TRANSMIRROR	1C51000713507	**1303,50**
GLORY ROSE METALIZED	1C51000713599	**1325,50**

Blown glass diffuser, NICKEL METAL STRUCTURE with white cable — ***€ VATEXCL.***

CLEAR	1C51000710420	**1248,50**
GLOSSY WHITE	1C51000710401	**1298,00**
GLOSSY SMOKED GREY	1C51000710426	**1413,50**
SILVER METALIZED TRANSMIRROR	1C51000710407	**1391,50**
GLORY ROSE METALIZED	1C51000710499	**1413,50**

LUISA T1

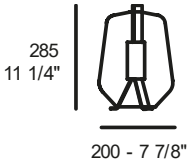

LED 8W - 2700 (717lm)

4,3 0,07

dimmer on cable

mm 2100

Blown glass diffuser, MATT WHITE PAINTED METAL STRUCTURE with white cable

		€ VAT EXCL.
CLEAR	1C50000113020	**599,50**
GLOSSY WHITE	1C50000113001	**643,50**
GLOSSY SMOKED GREY	1C50000113026	**731,50**
SILVER METALIZED TRANSMIRROR	1C50000113007	**698,50**
GLORY ROSE METALIZED	1C50000113099	**731,50**

Blown glass diffuser, CHROME METAL STRUCTURE with white cable

		€ VAT EXCL.
CLEAR	1C50000110120	**665,50**
GLOSSY WHITE	1C50000110101	**709,50**
GLOSSY SMOKED GREY	1C50000110126	**797,50**
SILVER METALIZED TRANSMIRROR	1C50000110107	**764,50**
GLORY ROSE METALIZED	1C50000110199	**797,50**

Blown glass diffuser, HERITAGE BRASS METAL STRUCTURE with white cable

		€ VAT EXCL.
CLEAR	1C50000111220	**665,50**
GLOSSY WHITE	1C50000111201	**709,50**
GLOSSY SMOKED GREY	1C50000111226	**797,50**
SILVER METALIZED TRANSMIRROR	1C50000111207	**764,50**
GLORY ROSE METALIZED	1C50000111299	**797,50**

Blown glass diffuser, MATT BLACK PAINTED METAL STRUCTURE with white cable

		€ VAT EXCL.
CLEAR	1C50000113520	**599,50**
GLOSSY WHITE	1C50000113501	**643,50**
GLOSSY SMOKED GREY	1C50000113526	**731,50**
SILVER METALIZED TRANSMIRROR	1C50000113507	**698,50**
GLORY ROSE METALIZED	1C50000113599	**731,50**

Blown glass diffuser, NICKEL METAL STRUCTURE with white cable

		€ VAT EXCL.
CLEAR	1C50000110420	**643,50**
GLOSSY WHITE	1C50000110401	**687,50**
GLOSSY SMOKED GREY	1C50000110426	**775,50**
SILVER METALIZED TRANSMIRROR	1C50000110407	**742,50**
GLORY ROSE METALIZED	1C50000110499	**775,50**

HANDLE FABRIC INCLUDED	
SURCHARGE FOR BLACK, LIGHT GREY OR BURGUNDY POWER CABLE	**16,50**

LUISA T3

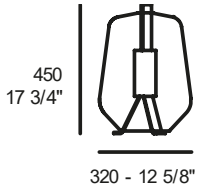

LED 13W - 2700K (1080lm)

IP20 Dimmable

Kg 7,0 | m³ 0,2 | 2

dimmer on cable — **mm 2100**

Blown glass diffuser, MATT WHITE PAINTED METAL STRUCTURE with white cable		***€ VATEXCL.***
CLEAR	1C50000313020	**1050,50**
GLOSSY WHITE	1C50000313001	**1100,00**
GLOSSY SMOKED GREY	1C50000313026	**1215,50**
SILVER METALIZED TRANSMIRROR	1C50000313007	**1193,50**
GLORY ROSE METALIZED	1C50000313099	**1215,50**

Blown glass diffuser, CHROME METAL STRUCTURE with white cable		***€ VATEXCL.***
CLEAR	1C50000310120	**1138,50**
GLOSSY WHITE	1C50000310101	**1188,00**
GLOSSY SMOKED GREY	1C50000310126	**1303,50**
SILVER METALIZED TRANSMIRROR	1C50000310107	**1281,50**
GLORY ROSE METALIZED	1C50000310199	**1303,50**

Blown glass diffuser, HERITAGE BRASS METAL STRUCTURE with white cable		***€ VATEXCL.***
CLEAR	1C50000311220	**1138,50**
GLOSSY WHITE	1C50000311201	**1188,00**
GLOSSY SMOKED GREY	1C50000311226	**1303,50**
SILVER METALIZED TRANSMIRROR	1C50000311207	**1281,50**
GLORY ROSE METALIZED	1C50000311299	**1303,50**

Blown glass diffuser, MATT BLACK PAINTED METAL STRUCTURE with white cable		***€ VATEXCL.***
CLEAR	1C50000313520	**1050,50**
GLOSSY WHITE	1C50000313501	**1100,00**
GLOSSY SMOKED GREY	1C50000313526	**1215,50**
SILVER METALIZED TRANSMIRROR	1C50000313507	**1193,50**
GLORY ROSE METALIZED	1C50000313599	**1215,50**

Blown glass diffuser, NICKEL METAL STRUCTURE with white cable		***€ VATEXCL.***
CLEAR	1C50000310420	**1138,50**
GLOSSY WHITE	1C50000310401	**1188,00**
GLOSSY SMOKED GREY	1C50000310426	**1303,50**
SILVER METALIZED TRANSMIRROR	1C50000310407	**1281,50**
GLORY ROSE METALIZED	1C50000310499	**1303,50**

HANDLE FABRIC INCLUDED	
SURCHARGE FOR BLACK, LIGHT GREY OR BURGUNDY POWER CABLE	**16,50**

MICO T1

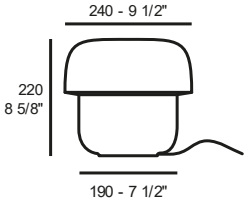

LED E27

IP20 Dimmable

Kg 2,8 m³ 0,031 I

dimmer on cable

mm 2000

glass diffuser, white fabric cable

		€ VAT EXCL.
OPAL WHITE	1B44000113001	**290,00**

MICO T3

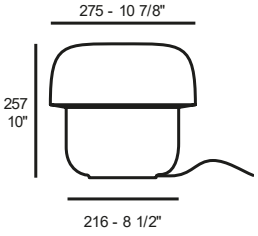

LED E27

IP20 Dimmable

Kg 4,8 m³ 0,07 I

dimmer on cable

mm 2000

glass diffuser, white fabric cable

		€ VAT EXCL.
OPAL WHITE	1B44000213001	**320,00**

MINT W3

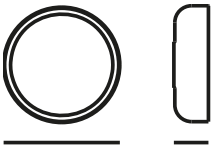

360 - 14 1/8" 110 - 4 3/8"

LED 14,2W - 3000K (2485lm)

Kg 6,0 m³ 0,137 I

2700K available with a surcharge of 3%

glass diffuser with polyethylene screen

		€ VATEXCL.
OPAL WHITE	1A01000610001	**590,00**

MINT W4

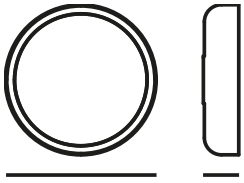

460 - 18 1/8" 110 - 4 1/2"

LED 16W - 3000K (2984lm)

Kg 7,8 m³ 0,19 2

2700K available with a surcharge of 3%

LED – dimmable trailing edge
glass diffuser with polyethylene screen

		€ VATEXCL.
OPAL WHITE	1A01000710001	**720,00**

MINT W5

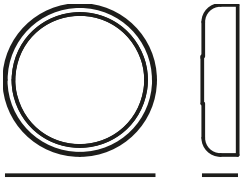

460 - 18 1/8" 110 - 4 1/2"

LED 23,6W - 3000K (4476lm)

Kg 7,8 m³ 0,19 2

2700K available with a surcharge of 3%

LED – dimmable trailing edge
glass diffuser with polyethylene screen

		€ VATEXCL.
OPAL WHITE	1A01000810001	**820,00**

MOOD SMALL W3

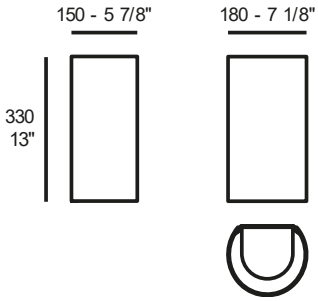

2xLED E27

Kg 3,5 | m³ 0,052 | 2

glass diffuser — ***€ VAT EXCL.***

OPAL WHITE / WHITE FILTER	1265000110041	**435,00**

MOOD W3

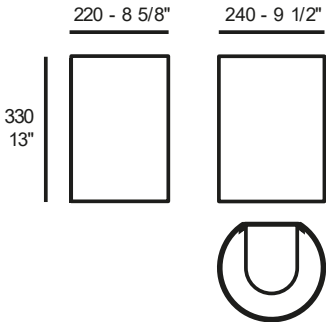

2xLED E27

Kg 4,7 | m³ 0,07 | 2

glass diffuser — ***€ VAT EXCL.***

OPAL WHITE / WHITE FILTER	1255000210041	**495,00**

MOONLIGHT W1

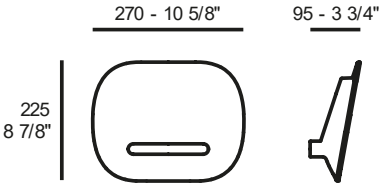

LED 8W - 3000K (1440lm)

Dimmable trailing edge

IP20 Dimmable

Kg 1,8 | m³ 0,024 | l

2700K available with a surcharge of 3%

ceramic diffuser made in Bassano		***€ VAT EXCL.***
GLAZED WHITE	1C61000113001	**340,00**
RAW TO BE PAINTED	1C61000113000	**320,00**

MOTION SENSOR AVAILABLE ON REQUEST

NOTTE S1/LED S1

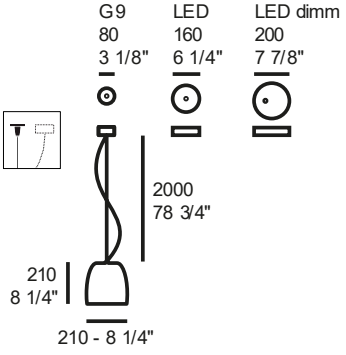

MAX 1x6W LED G9
LED 4,8W - 3000K (720lm)

Kg **2,7** m³ **0,031**

2700K available with a surcharge of 3%

G9
glass diffuser

		€ VAT EXCL.
OPAL WHITE	1283001410101	**357,50**
GLOSSY BLACK / WHITE INSIDE	1283001410124	**423,50**
GLOSSY BLACK / GOLD LEAF INSIDE	1283001410159	**423,50**
MIRROR / WHITE INSIDE	1283001410110	**478,50**
COPPER / WHITE INSIDE	1283001410170	**478,50**
TRANSPARENT / GOLD LEAF INSIDE	1283001410198	**434,50**

LED – dimmable trailing edge
glass diffuser

		€ VAT EXCL.
OPAL WHITE	1623002210101	**495,00**
GLOSSY BLACK / WHITE INSIDE	1623002210124	**561,00**
GLOSSY BLACK / GOLD LEAF INSIDE	1623002210159	**561,00**
MIRROR / WHITE INSIDE	1623002210110	**616,00**
COPPER / WHITE INSIDE	1623002210170	**616,00**
TRANSPARENT / GOLD LEAF INSIDE	1623002210198	**550,00**

LED DIMM (Dali/DSI - SwitchDIM - 1...10V - 0...10V)
glass diffuser

	Dimmable	*€ VAT EXCL.*
OPAL WHITE	1623002310101	**539,00**
GLOSSY BLACK / WHITE INSIDE	1623002310124	**550,00**
GLOSSY BLACK / GOLD LEAF INSIDE	1623002310159	**649,00**
MIRROR / WHITE INSIDE	1623002310110	**660,00**
COPPER / WHITE INSIDE	1623002310170	**654,50**
TRANSPARENT / GOLD LEAF INSIDE	1623002310198	**605,00**

LATERAL CEILING ATTACHMENT	6993601500100	**39,60**

NOTTE S3/LED S3

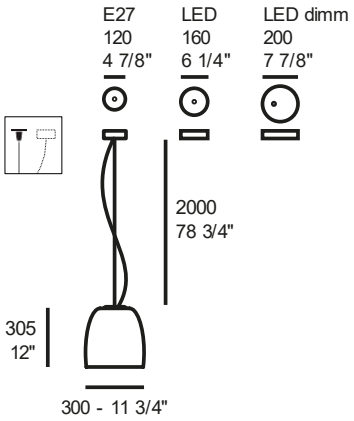

LED E27
LED 8,5W - 3000K (1044lm)

IP20 Dimmable

Kg **5,7** m³ **0,071**

2700K available with a surcharge of 3%

E27
glass diffuser

		€ VATEXCL.
OPAL WHITE	1283001510101	**423,50**
GLOSSY BLACK / WHITE INSIDE	1283001510124	**566,50**
GLOSSY BLACK / GOLD LEAF INSIDE	1283001510159	**566,50**
MIRROR / WHITE INSIDE	1283001510110	**654,50**
COPPER / WHITE INSIDE	1283001510170	**654,50**
TRANSPARENT / GOLD LEAF INSIDE	1283001510198	**588,50**

LED – dimmable trailing edge
glass diffuser

		€ VATEXCL.
OPAL WHITE	1623001410101	**698,50**
GLOSSY BLACK / WHITE INSIDE	1623001410124	**847,00**
GLOSSY BLACK / GOLD LEAF INSIDE	1623001410159	**847,00**
MIRROR / WHITE INSIDE	1623001410110	**929,50**
COPPER / WHITE INSIDE	1623001410170	**929,50**
TRANSPARENT / GOLD LEAF INSIDE	1623001410198	**858,00**

LED DIMM (Dali/DSI - SwitchDIM - 1...10V - 0...10V)
glass diffuser

	Dimmable	*€ VATEXCL.*
OPAL WHITE	1623001810101	**726,00**
GLOSSY BLACK / WHITE INSIDE	1623001810124	**869,00**
GLOSSY BLACK / GOLD LEAF INSIDE	1623001810159	**869,00**
MIRROR / WHITE INSIDE	1623001810110	**957,00**
COPPER / WHITE INSIDE	1623001810170	**957,00**
TRANSPARENT / GOLD LEAF INSIDE	1623001810198	**891,00**

LATERAL CEILING ATTACHMENT	6993601500100	**39,60**

NOTTE S5/LED S5

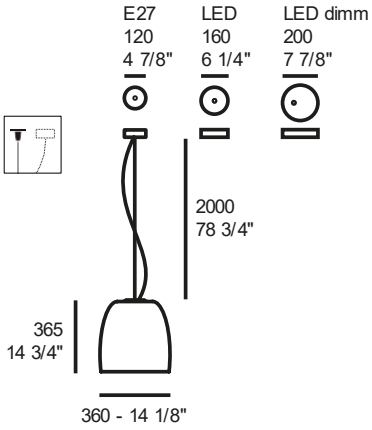

LED E27
LED 8,5W - 3000K (1044lm)

IP20 Dimmable

Kg **6,0** m³ **0,11**

2700K available with a surcharge of 3%

E27
glass diffuser

		€ VATEXCL.
OPAL WHITE	1283001610101	**539,00**
GLOSSY BLACK / WHITE INSIDE	1283001610124	**737,00**
GLOSSY BLACK / GOLD LEAF INSIDE	1283001610159	**737,00**
MIRROR / WHITE INSIDE	1283001610110	**808,50**
COPPER / WHITE INSIDE	1283001610170	**808,50**
TRANSPARENT / GOLD LEAF INSIDE	1283001610198	**764,50**

LED – dimmable trailing edge
glass diffuser

		€ VATEXCL.
OPAL WHITE	1623001510101	**814,00**
GLOSSY BLACK / WHITE INSIDE	1623001510124	**984,50**
GLOSSY BLACK / GOLD LEAF INSIDE	1623001510159	**984,50**
MIRROR / WHITE INSIDE	1623001510110	**1067,00**
COPPER / WHITE INSIDE	1623001510170	**1067,00**
TRANSPARENT / GOLD LEAF INSIDE	1623001510198	**984,50**

LED DIMM (Dali/DSI - SwitchDIM - 1...10V - 0...10V)
glass diffuser

	Dimmable	***€ VATEXCL.***
OPAL WHITE	1623001910101	**863,50**
GLOSSY BLACK / WHITE INSIDE	1623001910124	**1023,00**
GLOSSY BLACK / GOLD LEAF INSIDE	1623001910159	**1023,00**
MIRROR / WHITE INSIDE	1623001910110	**1155,00**
COPPER / WHITE INSIDE	1623001910170	**1155,00**
TRANSPARENT / GOLD LEAF INSIDE	1623001910198	**1056,00**

LATERAL CEILING ATTACHMENT	6993601500100	**39,60**

NOTTE S7/LED S7

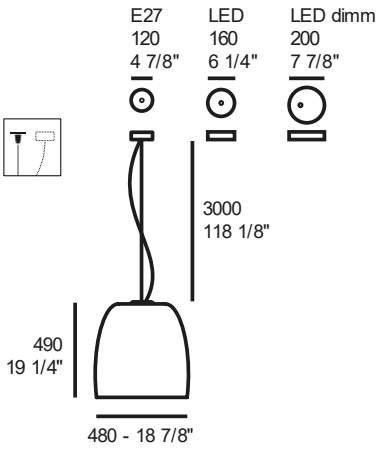

LED E27
LED 14W - 3000K (1417lm)

Kg 15,0 | m³ 0,307 | I

2700K available with a surcharge of 3%

E27
glass diffuser

		€ VAT EXCL.
GLOSSY WHITE	1283001710132	**1174,00**
GLOSSY BLACK / WHITE INSIDE	1283001710124	**1320,00**
GLOSSY BLACK / GOLD LEAF INSIDE	1283001710159	**1430,00**
MIRROR / WHITE INSIDE	1283001710110	**1430,00**
COPPER / WHITE INSIDE	1283001710170	**1430,00**
TRANSPARENT / GOLD LEAF INSIDE	1283001710198	**1430,00**

LED – dimmable trailing edge
glass diffuser

		€ VAT EXCL.
GLOSSY WHITE	1623001610132	**1405,00**
GLOSSY BLACK / WHITE INSIDE	1623001610124	**1595,00**
GLOSSY BLACK / GOLD LEAF INSIDE	1623001610159	**1650,00**
MIRROR / WHITE INSIDE	1623001610110	**1650,00**
COPPER / WHITE INSIDE	1623001610170	**1650,00**
TRANSPARENT / GOLD LEAF INSIDE	1623001610198	**1650,00**

LED DIMM (Dali/DSI - SwitchDIM - 1...10V - 0...10V)
glass diffuser

	Dimmable	*€ VAT EXCL.*
GLOSSY WHITE	1623002010132	**1449,00**
GLOSSY BLACK / WHITE INSIDE	1623002010124	**1650,00**
GLOSSY BLACK / GOLD LEAF INSIDE	1623002010159	**1760,00**
MIRROR / WHITE INSIDE	1623002010110	**1760,00**
COPPER / WHITE INSIDE	1623002010170	**1760,00**
TRANSPARENT / GOLD LEAF INSIDE	1623002010198	**1760,00**

LATERAL CEILING ATTACHMENT	6993601500100	**39,60**

NOTTE T1

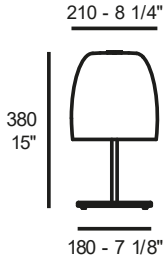

LED G9
ATTENTION: ONLY LED

IP20

5,3 | 0,048 | 1

dimmer on cable

mm 1750

blown glass diffuser, white fabric cable	*metal structure*		***€ VAT EXCL.***
OPAL WHITE	MATT WHITE	1284000313001	**390,00**
OPAL WHITE	HERITAGE BRASS	1284000311201	**420,00**

NOTTE F1

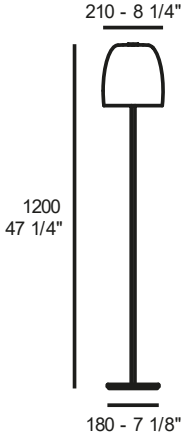

LED G9
ATTENTION: ONLY LED

IP20

7,4 | 0,096 | 2

dimmer on cable

mm 2550

blown glass diffuser, white fabric cable	*metal structure*		***€ VAT EXCL.***
OPAL WHITE	MATT WHITE	1282000313001	**425,00**
OPAL WHITE	HERITAGE BRASS	1282000311201	**465,00**

NOVIA T1 USB

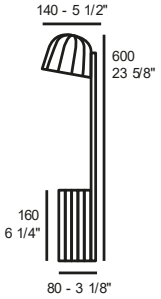

LED GU10 (range 4-10W) IP20

Kg 2,9 | m³ 0,03 | l

mm 2000

painted metal octagonal structure, universal USB port, white cable — ***€ VAT EXCL.***

MATT WHITE	1C63000113000	**275,00**
NCS colour S3030-G20Y GREEN	1C63000117400	**275,00**

CUSTOM NCS OR RAL COLOUR AVAILABLE ON REQUEST

NOVIA W1

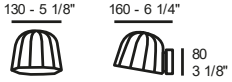

LED GU10 (range 4-10W) IP20

Kg 1,7 | m³ 0,02 | l

painted metal octagonal structure — ***€ VAT EXCL.***

MATT WHITE	1C63000213000	**176,00**
NCS colour S3030-G20Y GREEN	1C63000217400	**176,00**

CUSTOM NCS OR RAL COLOUR AVAILABLE ON REQUEST

NOVIA W1 USB

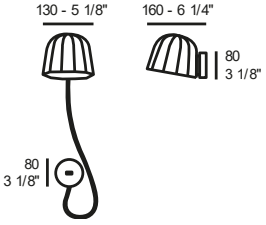

LED GU10 (range 4-10W) IP20

Kg 2,1 | m³ 0,02 | l

mm 1000

painted metal octagonal structure, universal USB port, red fabric cable. — ***€ VAT EXCL.***
Power connection on the USB module

MATT WHITE	1C63000313000	**209,00**
NCS colour S3030-G20Y GREEN	1C63000317400	**209,00**

CUSTOM NCS OR RAL COLOUR AVAILABLE ON REQUEST

OVER S3/LED S3

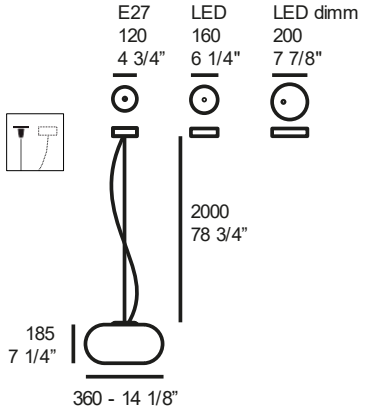

LED E27
LED 8,5W - 3000K (1044lm)

IP20 Dimmable

Kg **5,2** m³ **0,057**

2700K available with a surcharge of 3%

E27
glass diffuser

		€ VATEXCL.
OPAL WHITE	1303001010101	**420,00**

LED – dimmable trailing edge
glass diffuser

		€ VATEXCL.
OPAL WHITE	1303000610101	**715,00**

LED DIMM (Dali/DSI - SwitchDIM - 1...10V - 0...10V)
glass diffuser

		€ VATEXCL.
OPAL WHITE	1303000810101	**795,00**

LATERAL CEILING ATTACHMENT	6993601500100	**39,60**

OVER S5/LED S5

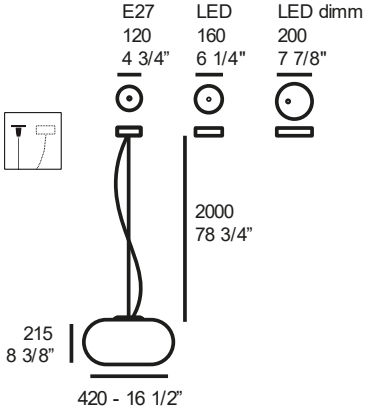

LED E27
LED 8,5W - 3000K (1044lm)

IP20 Dimmable

Kg **6,1** m³ **0,083**

2700K available with a surcharge of 3%

E27
glass diffuser

		€ VATEXCL.
OPAL WHITE	1303001110101	**500,00**

LED – dimmable trailing edge
glass diffuser

		€ VATEXCL.
OPAL WHITE	1303000710101	**780,00**

LED DIMM (Dali/DSI - SwitchDIM - 1...10V - 0...10V)
glass diffuser

		€ VATEXCL.
OPAL WHITE	1303000910101	**840,00**

LATERAL CEILING ATTACHMENT	6993601500100	**39,60**

PATENT PENDING

PARAPH T1

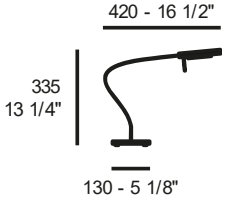

LED 6W - 3000K (610lm)

4,0 0,015

dimmer on cable mm 1900

T1
painted aluminium structure, pivoting 360° *€ VATEXCL.*
MATT BLACK 1A33000113500 **495,00**

T1 DIMM
painted aluminium structure, pivoting 360° *€ VATEXCL.*
MATT BLACK 1A33000213500 **550,00**

PARAPH T3

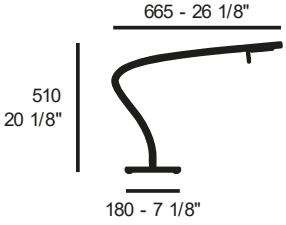

LED 6W - 3000K (610lm)

4,5 0,2

dimmer on cable mm 1900

T3
painted aluminium structure, pivoting 360° *€ VATEXCL.*
MATT BLACK 1A34000113500 **615,00**

T3 DIMM
painted aluminium structure, pivoting 360° *€ VATEXCL.*
MATT BLACK 1A34000213500 **670,00**

PARAPH F3

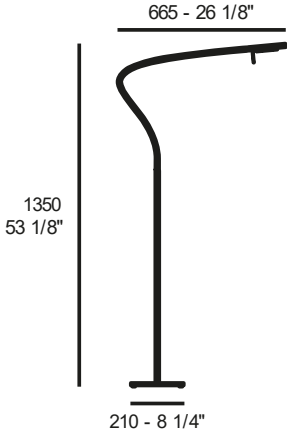

LED 6W - 3000K (610lm)

7,2 0,312

Dimmer on cable **mm 2300**

F3
painted aluminium structure, pivoting 360° ***€ VATEXCL.***

MATT BLACK	1A32000113500	**790,00**

F3 DIMM
painted aluminium structure, pivoting 360° ***€ VATEXCL.***

MATT BLACK	1A32000213500	**850,00**

PLATONE W1/LED W1

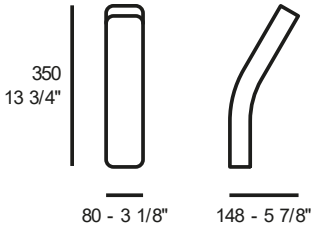

MAX 1x6W LED G9
LED 4,8W - 3000K (720lm)

Kg **1,3** m³ **0,013**

2700K available with a surcharge of 3%

G9
painted polyurethane body — ***€ VATEXCL.***

MATT WHITE	1945000113000	**165,00**

LED – dimmable trailing edge
painted polyurethane body — ***€ VATEXCL.***

MATT WHITE	1945000213000	**230,00**

PLATONE LED W3

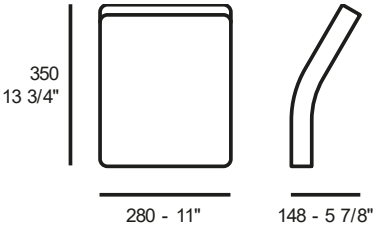

LED 15,3W - 3000K (1800lm)

Kg **2,6** m³ **0,028**

2700K available with a surcharge of 3%

painted polyurethane body – dimmable trailing edge — ***€ VATEXCL.***

MATT WHITE	1955000413000	**295,00**

SANTACHIARA S1/LED S1

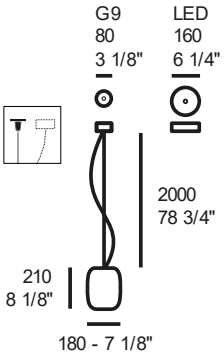

MIN 4W LED E14
LED 4,8W - 3000K (720lm)

Kg 2,4 | m³ 0,031 | I

2700K available with a surcharge of 3%

G9
glass diffuser

		€ VAT EXCL.
OPAL WHITE	1C13000113001	**325,00**

LED – dimmable trailing edge
glass diffuser

		€ VAT EXCL.
OPAL WHITE	1C13000413001	**525,00**
LATERAL CEILING ATTACHMENT	6993601400100	**22,00**

SANTACHIARA S1 3R/LED 3R

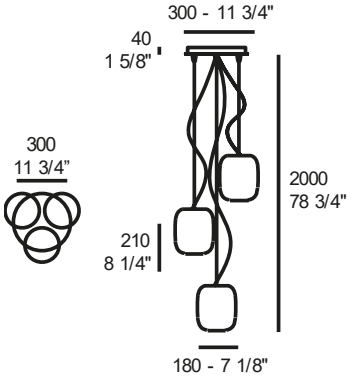

MIN 4W LED E14
LED 3x4,8W - 3000K (720lm)

Kg 8,6 | m³ 0,13 | 4

2700K available with a surcharge of 3%

G9 - 3R
glass diffuser

		€ VAT EXCL.
OPAL WHITE	1C13000713001	**990,00**

LED - 3R – dimmable trailing edge
glass diffuser

		€ VAT EXCL.
OPAL WHITE	1C13000813001	**1300,00**

LONGER CABLES TO BE QUOTED SEPARATELY

SANTACHIARA S3/LED S3

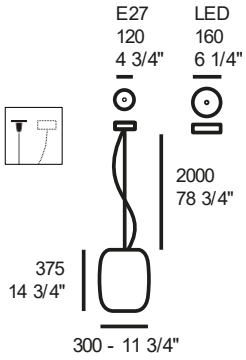

LED E27
LED 8,5W - 3000K (1044lm)

7,3 **0,110**

2700K available with a surcharge of 3%

E27
glass diffuser

		€ VAT EXCL.
OPAL WHITE	1C13000213001	**490,00**

LED – dimmable trailing edge
glass diffuser

		€ VAT EXCL.
OPAL WHITE	1C13000513001	**740,00**
LATERAL CEILING ATTACHMENT	6993601500100	**39,60**

SANTACHIARA S5/LED S5

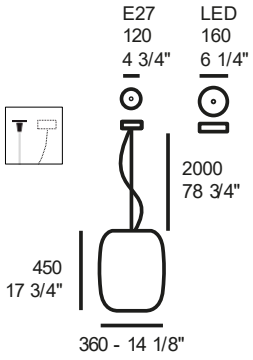

LED E27
LED 14W - 3000K (1417lm)

8,0 **0,163**

2700K available with a surcharge of 3%

E27
glass diffuser

		€ VAT EXCL.
OPAL WHITE	1C13000313001	**650,00**

LED – dimmable trailing edge
glass diffuser

		€ VAT EXCL.
OPAL WHITE	1C13000613001	**880,00**
LATERAL CEILING ATTACHMENT	6993601500100	**39,60**

SANTACHIARA T1

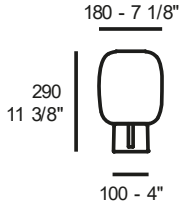

LED E14 – min 4W

IP20 Dimmable

Kg 2,0 | m³ 0,041 | l

mm 1750

blown glass diffuser with ash wood base - touch dimmer sensor - white fabric cable — ***€ VATEXCL.***

OPAL WHITE	1C15000115401	**380,00**

SANTACHIARA T3

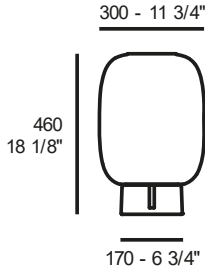

LED E27

IP20 Dimmable

Kg 2,4 | m³ 0,122 | l

mm 1750

blown glass diffuser with ash wood base - touch dimmer sensor – white fabric cable — ***€ VATEXCL.***

OPAL WHITE	1C15000205400	**590,00**

SANTACHIARA W1

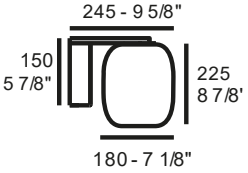

LED E14 – min 4 W

IP20

Kg 2,2 | m³ 0,11 | l

blown glass diffuser	*metal structure*		***€ VATEXCL.***
OPAL WHITE	MATT WHITE	1C16000113001	**385,00**

SEGESTA S3

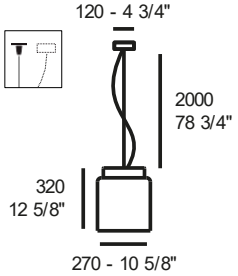

LED E27

5,4 kg — 0,071 m³

glass diffuser	*brass galvanized metal*	*€ VAT EXCL.*	*copper galvanized metal*	*€ VAT EXCL.*
OPAL WHITE	1B93000111201	**395,00**		
GLOSSY BLACK PAINTED			1B93000117012	**465,00**
LATERAL CEILING ATTACHMENT			6993601500100	**39,60**

SEGESTA S5

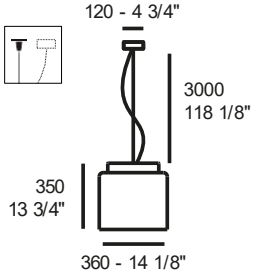

LED E27

8,2 kg — 0,122 m³

glass diffuser	*brass galvanized metal*	*€ VAT EXCL.*	*copper galvanized metal*	*€ VAT EXCL.*
OPAL WHITE	1B93000211201	**595,00**		
GLOSSY BLACK PAINTED			1B93000217012	**655,00**
LATERAL CEILING ATTACHMENT			6993601500100	**39,60**

SERA S1

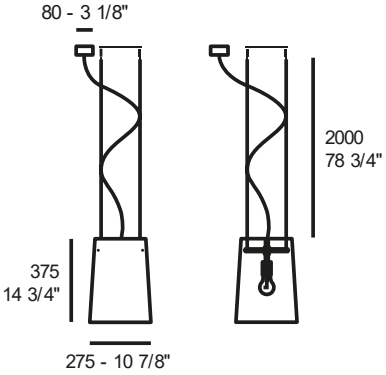

LED E27

6,0 | 0,087 | 2

glass diffuser	*structure*		***€ VAT EXCL.***
OPAL WHITE	CHROME	1333000710101	**695,00**
CLEAR CRYSTAL	CHROME	1333000710120	**695,00**
MIRROR	CHROME	1333000710107	**750,00**

SERA S3

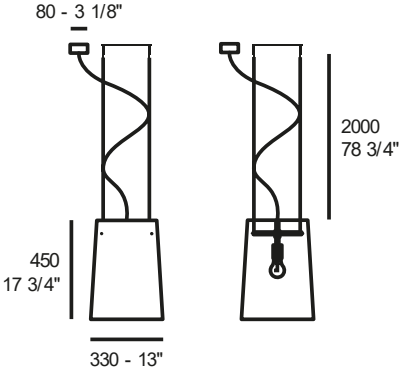

LED E27

9,5 | 0,16 | 2

glass diffuser	*structure*		***€ VAT EXCL.***
OPAL WHITE	CHROME	1333000810101	**725,00**
CLEAR CRYSTAL	CHROME	1333000810120	**725,00**
MIRROR	CHROME	1333000810107	**790,00**

SERA SMALL S1

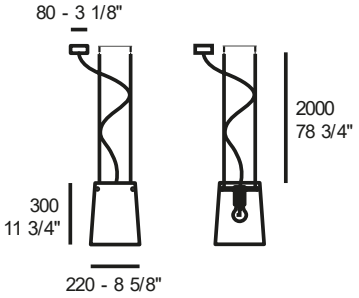

LED E27 | IP20 | 4,1 kg | 0,066 m³ | 2

glass diffuser	*structure*		***€ VAT EXCL.***
OPAL WHITE	CHROME	1343000510101	**550,00**
CLEAR CRYSTAL	CHROME	1343000510120	**550,00**
MIRROR	CHROME	1343000510107	**670,00**

SERA T1

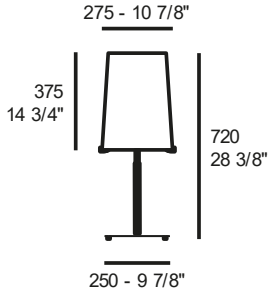

LED E27 | IP20 | Dimmable | 9,4 kg | 0,135 m³ | 2

dimmer on cable | **mm 1960**

glass diffuser – black fabric cable	*structure*		*structure*		***€ VAT EXCL.***
OPAL WHITE	CHROME	1334000310101	BRUSHED NICKEL	1334000310201	**690,00**
MIRROR	CHROME	1334000310107	BRUSHED NICKEL	1334000310207	**775,00**

SERA SMALL T1

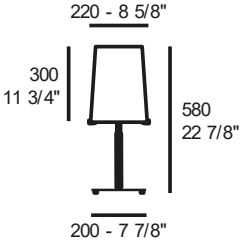

LED E27 | IP20 | Dimmable | 6,1 kg | 0,085 m³ | 2

dimmer on cable | **mm 2040**

glass diffuser – black fabric cable	*structure*		*structure*		***€ VAT EXCL.***
OPAL WHITE	CHROME	1344000110101	BRUSHED NICKEL	1344000110201	**525,00**
MIRROR	CHROME	1344000110107	BRUSHED NICKEL	1344000110207	**575,00**

SERA F1

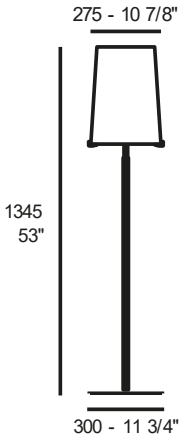

LED E27

dimmer on cable

16,4 | 0,212 | 3

mm 3050

glass diffuser – black fabric cable	*structure*		*structure*		***€ VAT EXCL.***
OPAL WHITE	CHROME	1332000310101	BRUSHED NICKEL	1332000310201	**890,00**
MIRROR	CHROME	1332000310107	BRUSHED NICKEL	1332000310207	**990,00**

SHUTTLE S3

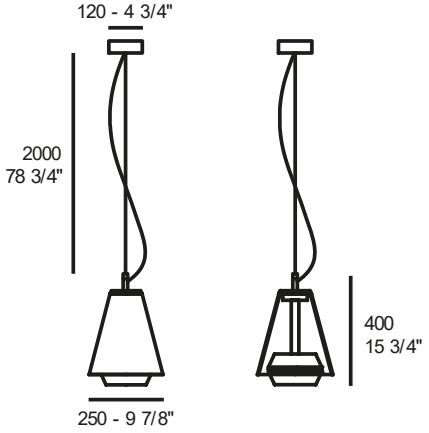

LED 6,3W + GU10 LED 8W – 3000K (1150lm)
CRI>90

Kg **8,5** m³ **0,10** 1

glass diffuser	*metal structure, white fabric cable*		*metal structure, black fabric cable*		***€ VATEXCL.***
OPAL WHITE	MATT WHITE	1D06200113001	MATT BLACK	1D06200113501	**525,00**
CLEAR CRYSTAL	MATT WHITE	1D06200113020	MATT BLACK	1D06200113520	**500,00**

SHUTTLE T3

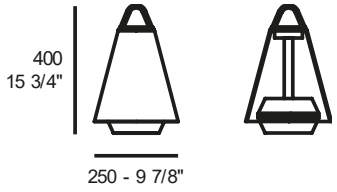

LED 6,3W – 2700,3000,4000K (600lm)
CRI>90

Kg **8,5** m³ **0,10** 1

Battery and USB C charger included
Battery (10200mA): <8 hours for 100% wattage
Charging time: 4 hours
Touch switch and touch dimm on top of the lamp

glass diffuser	*metal structure*		*metal structure*		***€ VATEXCL.***
OPAL WHITE	MATT WHITE	1D06100113001	MATT BLACK	1D06100113501	**550,00**
CLEAR CRYSTAL	MATT WHITE	1D06100113020	MATT BLACK	1D06100113520	**550,00**

ACCESSORY DESK-BASE FOR WIRELESS CHARGING	1D06900110000	**25,00**

SINO T3

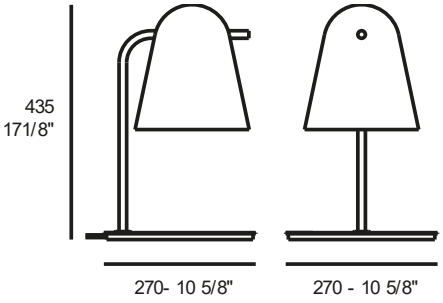

LED 4W – 2700K (505lm)
CRI>90

IP20 Dimmable

Kg **8,5** m³ **0,10** 1

dimmer on cable

Blown glass crystal diffuser, with fabric cable ***€ VATEXCL.***

MATT WHITE structure, with white fabric cable	1D02000113000	**760,00**
BLACK CHROME structure, with black fabric cable	1D02000116900	**795,00**
GOLD 24 structure, with black fabric cable	1D02000110500	**795,00**

3000K on request

SINO W3

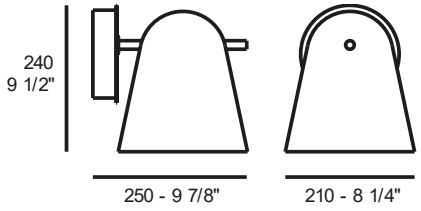

LED 4W - 2700K (505lm)
CRI>90

IP20

Kg **3,5** m³ **0,06** 1

Blown glass crystal diffuser ***€ VATEXCL.***

MATT WHITE structure	1D02001113000	**495,00**
BLACK CHROME structure	1D02001116900	**550,00**
GOLD 24 structure	1D02001110500	**550,00**

Dimmable version on request

Teca Supernatural

DESIGN BY
PRANDINA 2018

TECA SUPERNATURAL S1

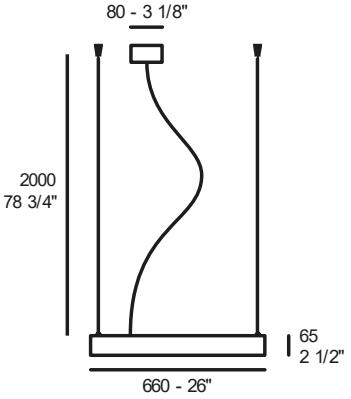

LED 16W - 3000K (2600lm)

Kg 2,5 | m³ 0,022 | I

2700K available with a surcharge of 3%

varnished wooden diffuser — ***€ VAT EXCL.***

NATURAL ASH	1483005415400	**450,00**

DIMMABLE LED VERSION AVAILABLE ON REQUEST

TECA SUPERNATURAL S3

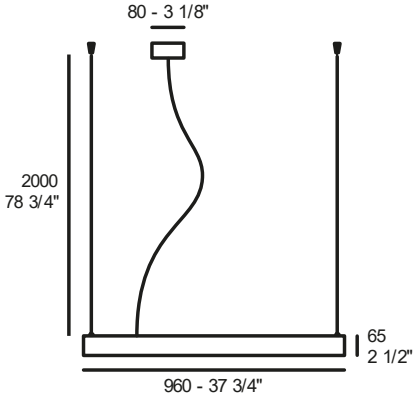

LED 24W - 3000K (3900lm)

Kg 3,1 | m³ 0,03 | I

2700K available with a surcharge of 3%

varnished wooden diffuser — ***€ VAT EXCL.***

NATURAL ASH	1483005515400	**590,00**

DIMMABLE LED VERSION AVAILABLE ON REQUEST

TECA SUPERNATURAL T1

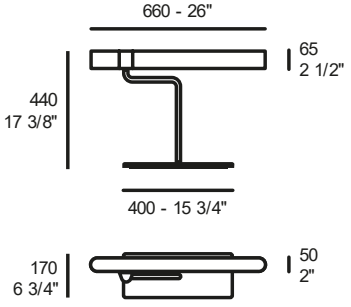

LED 16W - 3000K (2600lm)

Kg 14,3 | m³ 0,135 | I

Touch switch on wooden diffuser — **mm 2430**

2700K available with a surcharge of 3%

varnished wooden diffuser and base — ***€ VAT EXCL.***

NATURAL ASH	1484000815400	**825,00**

TEODORA S1

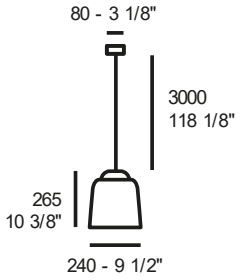

LED E27

3,0 0,04

painted metal diffuser with upper element in sandblasted glass	*self-supporting cable with covering in red fabric*	*self-supporting cable with covering in black fabric*	***€ VAT EXCL.***
GLOSSY WHITE	1B23000213657	1B23000213557	**400,00**
GLOSSY BLACK / WHITE INSIDE	1B23000213624	1B23000213524	**400,00**
MATT BLACK / WHITE INSIDE	1B23000213605	1B23000213505	**400,00**
MATT SAND-BEIGE / WHITE INSIDE	1B23000213627	1B23000213527	**400,00**
LIGHT BLUE / WHITE INSIDE	1B23000213642	1B23000213542	**400,00**
GLOSSY BLACK / GOLD LEAF INSIDE	1B23000213659	1B23000213559	**440,00**
ON REQUEST - self supporting kit for lateral ceiling attachment		6993601703000	**31,90**

TEODORA S3

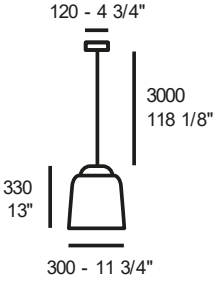

LED E27

4,3 0,071

painted metal diffuser with upper element in sandblasted glass	*self-supporting cable with covering in red fabric*	*self-supporting cable with covering in black fabric*	***€ VAT EXCL.***
GLOSSY WHITE	1B23000313657	1B23000313557	**540,00**
GLOSSY BLACK / WHITE INSIDE	1B23000313624	1B23000313524	**540,00**
MATT BLACK / WHITE INSIDE	1B23000313605	1B23000313505	**540,00**
MATT SAND-BEIGE / WHITE INSIDE	1B23000313627	1B23000313527	**540,00**
LIGHT BLUE / WHITE INSIDE	1B23000313642	1B23000313542	**540,00**
GLOSSY BLACK / GOLD LEAF INSIDE	1B23000313659	1B23000313559	**580,00**
ON REQUEST - self supporting kit for lateral ceiling attachment		6993601703000	**31,90**

TEODORA S5

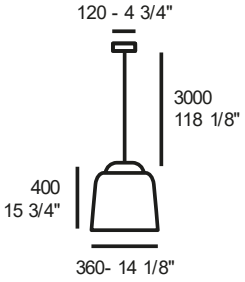

LED E27

IP20

5,5 0,11

painted metal diffuser with upper element in sandblasted glass	*self-supporting cable with covering in red fabric*	*self-supporting cable with covering in black fabric*	***€ VAT EXCL.***
GLOSSY WHITE	1B23000413657	1B23000413557	**570,00**
GLOSSY BLACK / WHITE INSIDE	1B23000413624	1B23000413524	**570,00**
MATT BLACK / WHITE INSIDE	1B23000413605	1B23000413505	**570,00**
MATT SAND-BEIGE / WHITE INSIDE	1B23000413627	1B23000413527	**570,00**
LIGHT BLUE / WHITE INSIDE	1B23000413642	1B23000413542	**570,00**
GLOSSY BLACK / GOLD LEAF INSIDE	1B23000413659	1B23000413559	**605,00**
ON REQUEST - self supporting kit for lateral ceiling attachment		6993601703000	**31,90**

TEODORA GLASS S1

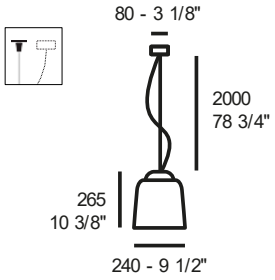

LED E27

3,0 kg | 0,040 m³

opal white glass diffuser with upper element in painted metal — ***€ VAT EXCL.***

GLOSSY BLACK	1B23000614601	**450,00**
MATT SAND-BEIGE	1B23000614401	**450,00**
LIGHT BLUE	1B23000614201	**450,00**
LATERAL CEILING ATTACHMENT	6993601500100	**39,60**

TEODORA GLASS S3

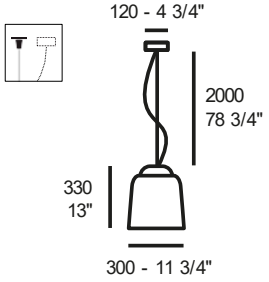

LED E27

4,1 kg | 0,070 m³

opal white glass diffuser with upper element in painted metal — ***€ VAT EXCL.***

GLOSSY BLACK	1B23000714601	**490,00**
MATT SAND-BEIGE	1B23000714401	**490,00**
LIGHT BLUE	1B23000714201	**490,00**
LATERAL CEILING ATTACHMENT	6993601500100	**39,60**

THE PEKERMAN PROJECT W1

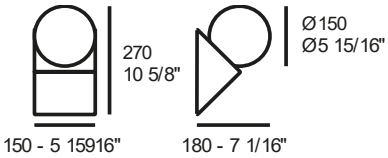

LED E27 | IP20 | Kg 2 | m³ 0,05 | 1

glossy white glass diffuser — ***€ VATEXCL.***

MATT WHITE STRUCTURE	1D07100113001	**250,00**
GLOSSY BRASS STRUCTURE	1D07100111201	**270,00**
MATT BRASS STRUCTURE	1D07100110501	**270,00**
GLOSSY COPPER STRUCTURE	1D07100117001	**270,00**

CUSTOM COLOR ON REQUEST

LOGO OR ANY OTHER PERSONALIZATION ON REQUEST

THE PEKERMAN PROJECT C1

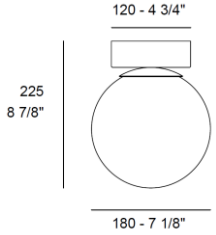

LED E27 | IP20 | Kg 2 | m³ 0,07 | 1

glossy white glass diffuser — ***€ VATEXCL.***

MATT WHITE STRUCTURE	1D07200113001	**300,00**
GLOSSY BRASS STRUCTURE	1D07200110501	**320,00**
MATT BRASS STRUCTURE	1D07200111201	**320,00**
GLOSSY COPPER STRUCTURE	1D07200117001	**320,00**

CUSTOM COLOR ON REQUEST

THE PEKERMAN PROJECT C3

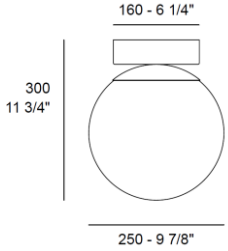

LED E27 | IP20 | Kg 2 | m³ 0,0 | 1

glossy white glass diffuser — ***€ VATEXCL.***

MATT WHITE STRUCTURE	1D07200213001	**400,00**
GLOSSY BRASS STRUCTURE	1D07200210501	**420,00**
MATT BRASS STRUCTURE	1D07200211201	**420,00**
GLOSSY COPPER STRUCTURE	1D07200217001	**420,00**

CUSTOM COLOR ON REQUEST

TIARA S3/LED S3

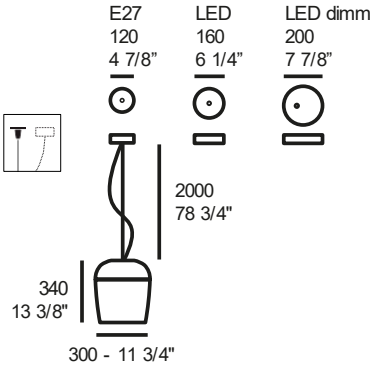

LED E27
LED 8,5W - 3000K (1044lm)

IP20 Dimmable

Kg **6,5** m³ **0,071** I

2700K available with a surcharge of 3%

E27
glossy glass diffuser

		€ VAT EXCL.
WHITE / WHITE INSIDE	1A73000213001	**650,00**
BLACK / WHITE INSIDE	1A73000213005	**690,00**

LED – dimmable trailing edge
glossy glass diffuser

		€ VAT EXCL.
WHITE / WHITE INSIDE	1A73000513001	**800,00**
BLACK / WHITE INSIDE	1A73000513005	**840,00**

LED DIMM (Dali/DSI - SwitchDIM - 1...10V - 0...10V)
glossy glass diffuser

	Dimmable	*€ VAT EXCL.*
WHITE / WHITE INSIDE	1A73000713001	**850,00**
BLACK / WHITE INSIDE	1A73000713005	**890,00**

LATERAL CEILING ATTACHMENT	6993601500100	**39,60**

TIARA S5/LED S5

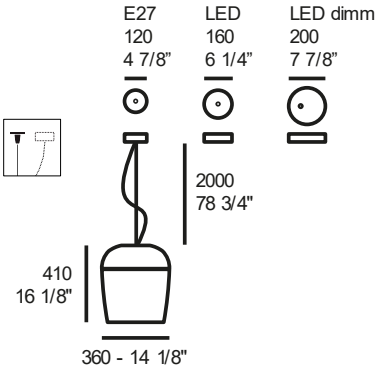

LED E27
LED 8,5W - 3000K (1044lm)

IP20 Dimmable

Kg **8,0** m³ **0,12** I

2700K available with a surcharge of 3%

E27

glossy glass diffuser		***€ VATEXCL.***
WHITE / WHITE INSIDE	1A73000913001	**740,00**
BLACK / WHITE INSIDE	1A73000913005	**780,00**

LED – dimmable trailing edge

glossy glass diffuser		***€ VATEXCL.***
WHITE / WHITE INSIDE	1A73000613001	**950,00**
BLACK / WHITE INSIDE	1A73000613005	**990,00**

LED DIMM (Dali/DSI - SwitchDIM - 1...10V - 0...10V)

glossy glass diffuser	Dimmable	***€ VATEXCL.***
WHITE / WHITE INSIDE	1A73000813001	**990,00**
BLACK / WHITE INSIDE	1A73000813005	**1050,00**

LATERAL CEILING ATTACHMENT	6993601500100	**39,60**

TULIPA S3

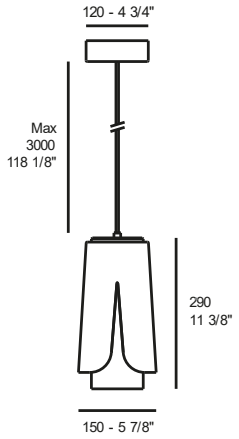

LED E27 (not included) IP20

Kg **3,6** m³ **0,04** 1

Metal diffusers (outer and inner),white or black fabric cable		***€ VATEXCL.***
MATT WHITE OUTER – MATT WHITE INNER	1D01000113001	**690,00**
MATT WHITE OUTER – BLACK CHROME INNER	1D01000113005	**690,00**
MATT WHITE OUTER – POLISHED COPPER INNER	1D01000113070	**690,00**
MATT WHITE OUTER – LUXURY GOLD INNER	1D01000113098	**690,00**
MATT BLACK OUTER – MATT WHITE INNER	1D01000113501	**690,00**
MATT BLACK OUTER – BLACK CHROME INNER	1D01000113505	**690,00**
MATT BLACK OUTER – POLISHED COPPER INNER	1D01000113570	**690,00**
MATT BLACK OUTER – LUXURY GOLD INNER	1D01000113598	**690,00**

Vestale

DESIGN BY
SERGIO PRANDINA 2016

VESTALE S3

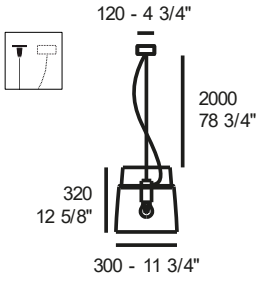

LED E27

CE F IP20

Kg 7,0 m³ 0,111 I

glass diffuser		***€ VATEXCL.***
GLOSSY WHITE / TRANSPARENT	1B83000210101	**570,00**
GLOSSY SMOKED GREY / TRANSPARENT	1B83000210126	**570,00**
LATERAL CEILING ATTACHMENT	6993601500100	**39,60**

VESTALE T3

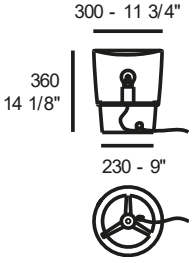

LED E27

CE F IP20 Dimmable

Kg 6,7 m³ 0,131 I

dimmer on cable **mm 2000**

glass diffuser, grey fabric cable		***€ VATEXCL.***
GLOSSY WHITE / TRANSPARENT	1B84000214301	**550,00**
GLOSSY SMOKED GREY / TRANSPARENT	1B84000214326	**550,00**

ZERO S1G9

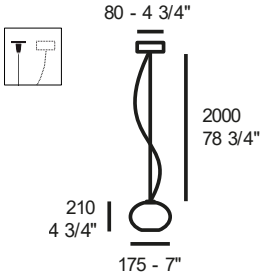

MAX 1x4W LEDG9

Kg	m³	l
1,7	0,014	

glass diffuser		*€ VATEXCL.*
OPAL WHITE	1423001910101	**275,00**
LATERAL CEILING ATTACHMENT	6993601400100	**22,00**

ZERO S3/LED S3

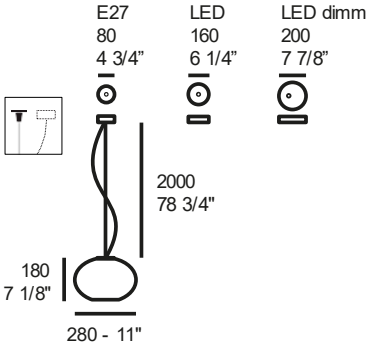

LED E27
LED 8,5W - 3000K (1044lm)

Kg	m³	l
4,0	0,054	

2700K available with a surcharge of 3%

E27

glass diffuser		*€ VATEXCL.*
OPAL WHITE	1423002010101	**350,00**

LED – dimmable trailing edge

glass diffuser		*€ VATEXCL.*
OPAL WHITE	1643000610101	**650,00**

LED DIMM (Dali/DSI - SwitchDIM - 1...10V - 0...10V)

glass diffuser		*€ VATEXCL.*
OPAL WHITE	1643000910101	**725,00**
LATERAL CEILING ATTACHMENT	6993601500100	**39,60**

ZERO S5/LED S5

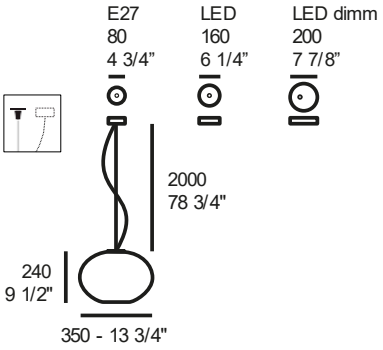

LED E27
LED 8,5W - 3000K (1044lm)

Kg 5,5 | m³ 0,078

2700K available with a surcharge of 3%

E27
glass diffuser

		€ VAT EXCL.
OPAL WHITE	1423002110101	**430,00**

LED – dimmable trailing edge
glass diffuser

		€ VAT EXCL.
OPAL WHITE	1643000710101	**735,00**

LED DIMM (Dali/DSI - SwitchDIM - 1...10V - 0...10V)
glass diffuser

		€ VAT EXCL.
OPAL WHITE	1643001010101	**795,00**

LATERAL CEILING ATTACHMENT	6993601500100	**39,60**

ZERO S7/LED S7

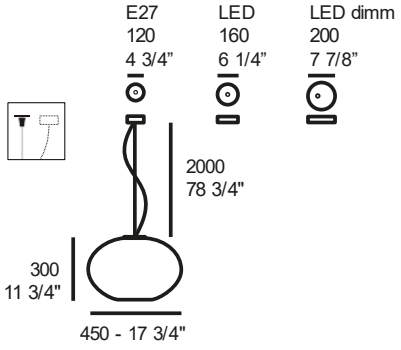

LED E27
LED 8,5W - 3000K (1044lm)

Kg 8,0 | m³ 0,132

2700K available with a surcharge of 3%

E27
glass diffuser

		€ VAT EXCL.
OPAL WHITE	1423002210101	**500,00**

LED – dimmable trailing edge
glass diffuser

		€ VAT EXCL.
OPAL WHITE	1643000810101	**800,00**

LED DIMM (Dali/DSI - SwitchDIM - 1...10V - 0...10V)
glass diffuser

		€ VAT EXCL.
OPAL WHITE	1643001110101	**860,00**

LATERAL CEILING ATTACHMENT	6993601500100	**39,60**

ZERODIECI S5/LED S5

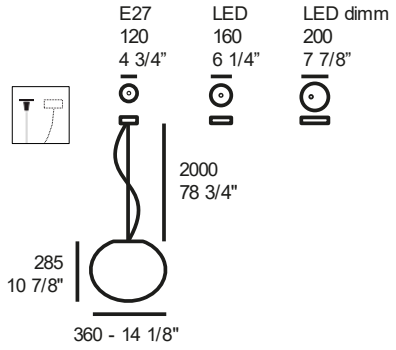

LED E27
LED 8,5W - 3000K (1044lm)

6,1 | 0,097

2700K available with a surcharge of 3%

E27
glass diffuser

		€ VAT EXCL.
OPAL WHITE	1983001613001	**420,00**

LED – dimmable trailing edge
glass diffuser

		€ VAT EXCL.
OPAL WHITE	1983001013001	**660,00**

LED DIMM (Dali/DSI - SwitchDIM - 1...10V - 0...10V)
glass diffuser

		€ VAT EXCL.
OPAL WHITE	1983001313001	**690,00**

LATERAL CEILING ATTACHMENT	6993601500100	**39,60**

ZERODIECI S7/LED S7

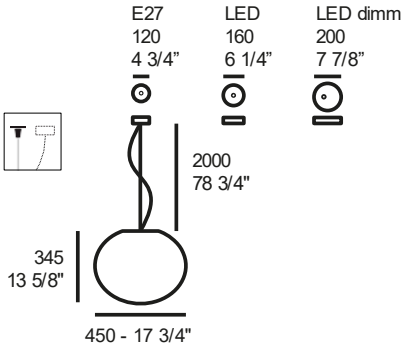

LED E27
LED 8,5W - 3000K (1044lm)

8,5 | 0,181

2700K available with a surcharge of 3%

E27
glass diffuser

		€ VAT EXCL.
OPAL WHITE	1983001813001	**520,00**

LED – dimmable trailing edge
glass diffuser

		€ VAT EXCL.
OPAL WHITE	1983001113001	**790,00**

LED DIMM (Dali/DSI - SwitchDIM - 1...10V - 0...10V)
glass diffuser

		€ VAT EXCL.
OPAL WHITE	1983001413001	**860,00**

LATERAL CEILING ATTACHMENT	6993601500100	**39,60**

SPARE PARTS – Fixed discount 30%

Please remember to check the compatibility in case of lamps purchased more than 3 years ago.

Spare parts prices cannot be shown online.

6A42000200001	Bloom S5/F5	Lower glass diffuser in opal white	486,00
6A42000200005	Bloom S5	Lower glass diffuser in glossy black	486,00
6A42000200070	Bloom S5	Lower glass diffuser in glossy copper	600,00
6A42000100001	Bloom S5/F5	Upper glass diffuser in opal white	396,00
6A42000100005	Bloom S5	Upper glass diffuser in glossy black	396,00

6D09100100000	Capitan da Mar S1/T1	Clear crystal diffuser diam. 20cm	186,00
6D09100200000	Capitan da Mar S3/T3	Clear crystal diffuser diam. 36cm	447,00

6812000100001	CPL Mini W1	Opal white glass diffuser	91,00
6812000100032	CPL Mini W1	Glossy white glass diffuser	91,00
6812000200001	CPL Mini W3	Opal white glass diffuser	96,00
6812000200032	CPL Mini W3	Glossy white glass diffuser	96,00
6812000300001	CPL Mini W5	Opal white glass diffuser	116,00
6812000300032	CPL Mini W5	Glossy white glass diffuser	116,00
6082000300001	CPL S1	Opal white glass diffuser	462,00
6082000300020	CPL S1	Crystal glass diffuser	463,00
6082001200001	CPL S7	Opal white glass diffuser	600,00
6082001200001	CPL T30	Opal white glass diffuser	474,00
6082001200006	CPL T30	Opal red glass diffuser	474,00
6082000700007	CPL S7	Mirror glass diffuser	780,00
6082000700070	CPL S7	Copper glass diffuser	780,00
6092000100001	CPL SMALL T1	Opal white glass diffuser	197,00

SPARE PARTS – Fixed discount 30%

6C80000100000	Diver C1/S1/T1	Crystal glass diffuser	418,00
6C80000200000	Diver C3/S3/T3	Crystal glass diffuser	424,00
6C80000300000	Diver C5/S5/T5	Crystal glass diffuser	430,00
6C81000200000	Diver W5	Internal opal white glass diffuser	432,00
6C80000400000	Diver W5	Outer crystal glass diffuser	593,00

6B32000400001	Effimera F50	White fabric diffuser	396,00
6B32000400005	Effimera F50	Black fabric diffuser	396,00

6142000200000	Extra S1	Opal white glass diffuser	200,00
6142000200007	Extra S1	Mirror glass diffuser	216,00
6142000300001	Extra S3	Opal white glass diffuser	241,00
6142000300007	Extra S3	Mirror glass diffuser	262,00

6C86000100000	Fez F1/S1	Crystal cylindrical glass diffuser	224,00
6C86000200000	Fez F3/S3	Crystal cylindrical glass diffuser	275,00
6C86000100020	Fez T1	Crystal cylindrical glass diffuser	221,00
6C86000200020	Fez T3	Crystal cylindrical glass diffuser	275,00

6152000100001	Finland C1	Painted glass diffuser	132,00
6153500100001	Finland C1G/C3G	Glass ceiling rose	86,00
6152000200001	Finland C3	Painted glass diffuser	194,00

SPARE PARTS – Fixed discount 30%

6881500100020	Glam Small T1	Crystal base	178,00
6882000100001	Glam Small T1	Opal white glass diffuser	178,00
6882000100006	Glam Small T1	Opal red glass diffuser	178,00
6881500200020	Glam Small T3	Crystal base	238,00
6882000200001	Glam Small T3	Opal white glass diffuser	238,00
6882000200006	Glam Small T3	Opal red glass diffuser	238,00
6471500100020	Glam T1	Crystal base	392,00
6472000100001	Glam T1	Opal white glass diffuser	392,00
6472000100005	Glam T1	Opal black glass diffuser	392,00
6472000100006	Glam T1	Opal red glass diffuser	392,00
6472000100007	Glam T1	Mirror glass diffuser	396,00
6471500200020	Glam T3	Crystal base	432,00
6472000200001	Glam T3	Opal white glass diffuser	432,00
6472000200005	Glam T3	Opal black glass diffuser	432,00
6472000200006	Glam T3	Opal red glass diffuser	432,00
6472000200007	Glam T3	Mirror glass diffuser	480,00

6A62000400070	Gong mini G4	Golden copper metalized glass diffuser	267,00
6A62000400071	Gong mini G4	Silver metalized glass diffuser	267,00
6A62000400001	Gong mini G4	White glass diffuser	208,00
6A62000400098	Gong mini G4	Gold leaf glass diffuser	233,00
6A62000400005	Gong mini G4	Black metalized glass diffuser	267,00
6A62000400099	Gong mini G4	Glory rose metalized glass diffuser	267,00

SPARE PARTS – Fixed discount 30%

6A62000600071	Gong mini Led	Silver metalized glass diffuser	345,00
6A62000600001	Gong mini Led	White glass diffuser	292,00
6A62000600070	Gong mini Led	Golden copper metalized glass diffuser	345,00
6A62000600098	Gong mini Led	Gold leaf glass diffuser	314,00
6A62000600005	Gong mini Led	Black metalized glass diffuser	345,00
6A62000600099	Gong mini Led	Glory rose metalized glass diffuser	345,00

6A62000300071	Gong S1	Silver metalized glass diffuser	338,00
6A62000300001	Gong S1	White glass diffuser	283,00
6A62000300070	Gong S1	Golden copper metalized glass diffuser	338,00
6A62000300005	Gong S1	Black metalized glass diffuser	338,00
6A62000300098	Gong S1	Gold leaf glass diffuser	301,00
6A62000300099	Gong S1	Glory rose metalized glass diffuser	264,00
6A62000110071	Gong S3	Silver metalized glass diffuser	614,00
6A62000100041	Gong S3	White glass diffuser	518,00
6A62000100098	Gong S3	Gold leaf glass diffuser	578,00
6A62000100005	Gong S3	Black metalized glass diffuser	525,00
6A62000110070	Gong S3	Golden copper metalized glass diffuser	743,00
6A62000100099	Gong S3	Glory rose metalized glass diffuser	744,00
6A62000700071	Gong S5	Silver metalized glass diffuser	975,00
6A62000700041	Gong S5	White glass diffuser	694,00
6A62000700070	Gong S5	Golden copper metalized glass diffuser	975,00
6A62000700098	Gong S5	Gold leaf glass diffuser	732,00
6A62000700005	Gong S5	Black metalized glass diffuser	702,00
6A62000700099	Gong S5	Glory rose metalized glass diffuser	975,00

SPARE PARTS – Fixed discount 30%

6A62001200071	Gong T1	Silver metalized glass diffuser	364,00
6A62001200001	Gong T1	White glass diffuser	315,00
6A62001200098	Gong T1	Gold leaf glass diffuser	343,00
6A62001200099	Gong T1	Glory rose metalized glass diffuser	364,00
6A62001200005	Gong T1	Black metalized glass diffuser	364,00
6A62001200070	Gong T1	Golden copper metalized glass diffuser	364,00
6A62000800001	Gong T3	White glass diffuser	455,00
6A62000800070	Gong T3	Golden copper metalized glass diffuser	630,00
6A62000800098	Gong T3	Gold leaf glass diffuser	490,00
6A62000800071	Gong T3	Silver metalized glass diffuser	630,00

6C22000500031	Landing S70	Matt white painted metal	516,00
6C22000500015	Landing S70	Chrome galvanized finish	516,00
6C22000500005	Landing S70	Matt black painted metal	516,00
6C22000500016	Landing S70	Brass galvanized	516,00
6C22000100001	Landing S70 Glass	Sandblasted glass diffuser	500,00

6C70000100001	Luisa S1/T1	Glossy white glass diffuser	354,00
6C70000100020	Luisa S1/T1	Crystal glass diffuser	330,00
6C70000100026	Luisa S1/T1	Glossy smoked grey glass diffuser	403,00
6C70000100099	Luisa S1/T1	Glory rose metalized glass diffuser	403,00
6C70000100007	Luisa S1/T1	Mirror glass diffuser	385,00
6C70000200001	Luisa S3/T3	Glossy white glass diffuser	770,00
6C70000200020	Luisa S3/T3	Crystal glass diffuser	736,00
6C70000200026	Luisa S3/T3	Glossy smoked grey glass diffuser	851,00
6C70000200099	Luisa S3/T3	Glory rose metalized glass diffuser	851,00
6C70000200007	Luisa S3/T3	Mirror glass diffuser	836,00

SPARE PARTS – Fixed discount 30%

6B42000300001	Mico T1	Opal white glass diffuser	198,00
6B42000200001	Mico T3	Opal white glass diffuser	218,00
6A02000200001	Mint W3	Outer opal white glass diffuser	325,00
6A02000700001	Mint W4/W5	Outer opal white glass diffuser	451,00
6262000100001	Mood Small W3	Opal white glass diffuser	348,00
6252000200001	Mood W3	Opal white glass diffuser	396,00
6282000700001	Notte S1	Opal white glass diffuser	250,00
6282000700070	Notte S1	Copper glass diffuser	335,00
6282000700098	Notte S1	Gold leaf glass diffuser	305,00
6282000700024	Notte S1	Glossy black (white inside) glass diffuser	297,00
6282000700059	Notte S1	Glossy black (gold leaf inside) glass diffuser	297,00
6282000700010	Notte S1	Mirror glass diffuser	335,00
6282000100001	Notte S3	Opal white glass diffuser	297,00
6282000100070	Notte S3	Copper glass diffuser	459,00
6282000100098	Notte S3	Gold leaf glass diffuser	412,00
6282000100024	Notte S3	Glossy black (white inside) glass diffuser	397,00
6282000100059	Notte S3	Glossy black (gold leaf inside) glass diffuser	397,00
6282000100010	Notte S3	Mirror glass diffuser	459,00
6282000200001	Notte S5	Opal white glass diffuser	378,00
6282000200070	Notte S5	Copper glass diffuser	566,00
6282000200024	Notte S5	Gold leaf glass diffuser	516,00
6282000200059	Notte S5	Glossy black (white inside) glass diffuser	516,00
6282000200098	Notte S5	Glossy black (gold leaf inside) glass diffuser	536,00
6282000200010	Notte S5	Mirror glass diffuser	566,00

SPARE PARTS – Fixed discount 30%

6282000300059	Notte S7	Glossy black (gold leaf inside) glass diffuser	1.187,00
6282000300024	Notte S7	Glossy black (white inside) glass diffuser	1.096,00
6282000300070	Notte S7	Copper glass diffuser	1.187,00
6282000300010	Notte S7	Mirror glass diffuser	1.187,00
6282000300001	Notte S7	Glossy white glass diffuser	975,00
6282000300098	Notte S7	Gold leaf glass diffuser	976,00
6282001200001	Notte T1	Opal white glass diffuser	273,00

6302000100001	Over S3	Opal white glass diffuser	273,00
6302000200001	Over S5	Opal white glass diffuser	325,00

6C12000100001	Santachiara S1/T1	Opal white glass diffuser	212,00
6C12000200001	Santachiara S3/T3	Opal white glass diffuser	319,00
6C12000300001	Santachiara S5	Opal white glass diffuser	423,00

6B92000200012	Segesta S3	Glossy black glass diffuser	303,00
6B92000200001	Segesta S3	Opal white glass diffuser	257,00
6B92000100012	Segesta S5	Glossy black glass diffuser	426,00
6B92000100001	Segesta S5	Opal white glass diffuser	387,00

6332000100001	Sera S1	Opal white glass diffuser	452,00
6332000100020	Sera S1	Crystal glass diffuser	452,00
6332000100007	Sera S1	Mirror glass diffuser	488,00
6332000200007	Sera S3	Mirror glass diffuser	553,00
6332000200020	Sera S3	Crystal glass diffuser	508,00
6332000200001	Sera S3	Opal white glass diffuser	508,00

SPARE PARTS – Fixed discount 30%

6332000400001	Sera Small S1	Opal white glass diffuser	358,00
6332000400020	Sera Small S1	Crystal glass diffuser	358,00
6332000400007	Sera Small S1	Mirror glass diffuser	436,00
6332000500001	Sera Small T1	Opal white glass diffuser	342,00
6332000500007	Sera Small T1	Mirror glass diffuser	374,00
6332000600001	Sera T1/F1	Opal white glass diffuser	449,00
6332000600007	Sera T1/F1	Mirror glass diffuser	504,00

6C85000100000	Sino T3/W3	Crystal glass diffuser	273,00
6B22001100001	Teodora Glass S1	Opal white glass diffuser	225,00
6B22001200001	Teodora Glass S3	Opal white glass diffuser	245,00
6B22000700042	Teodora S1	Light-blue metal diffuser	260,00
6B22000700057	Teodora S1	Glossy white metal diffuser	260,00
6B22000700027	Teodora S1	Sand-beige metal diffuser	260,00
6B22000700024	Teodora S1	Glossy black metal diffuser	260,00
6B22000700059	Teodora S1	Glossy black (gold leaf inside) metal diffuser	286,00
6B22000700005	Teodora S1	Matt black painted metal	260,00
6B22000200000	Teodora S1	Upper sandblasted glass	80,00
6B22000800042	Teodora S3	Light-blue metal diffuser	351,00
6B22000800057	Teodora S3	Glossy white metal diffuser	351,00
6B22000800027	Teodora S3	Sand-beige metal diffuser	351,00
6B22000800024	Teodora S3	Glossy black metal diffuser	351,00
6B22000800059	Teodora S3	Glossy black (gold leaf inside) metal diffuser	377,00
6B22000800005	Teodora S3	Matt black painted metal	351,00
6B22000300000	Teodora S3	Upper sandblasted glass	108,00

SPARE PARTS – Fixed discount 30%

6B22000900042	Teodora S5	Light-blue metal diffuser	371,00
6B22000900057	Teodora S5	Glossy white metal diffuser	371,00
6B22000900027	Teodora S5	Sand-beige metal diffuser	371,00
6B22000900024	Teodora S5	Glossy black metal diffuser	371,00
6B22000900059	Teodora S5	Glossy black (gold leaf inside) metal diffuser	394,00
6B22000900005	Teodora S5	Matt black painted metal	371,00
6B22000400000	Teodora S5	Upper sandblasted glass	114,00

6A72000200001	Tiara S3	Glossy white glass diffuser	488,00
6A72000200005	Tiara S3	Glossy black glass diffuser	518,00
6A72000300001	Tiara S5	Glossy white glass diffuser	555,00
6A72000300005	Tiara S5	Glossy black glass diffuser	585,00

6B82000200001	Vestale S3	Glossy white glass diffuser	428,00
6B82000200026	Vestale S3	Glossy smoked grey glass diffuser	428,00
6B82000100001	Vestale T3	Glossy white glass diffuser	413,00
6B82000100026	Vestale T3	Glossy smoked grey glass diffuser	413,00

6422001000001	Zero S1	Opal white glass diffuser	220,00
6422000600001	Zero S3	Opal white glass diffuser	280,00
6422000700001	Zero S5	Opal white glass diffuser	344,00
6422000800001	Zero S7	Opal white glass diffuser	400,00

6982000100001	Zerodieci S5	Opal white glass diffuser	336,00
6982000200001	Zerodieci S7	Opal white glass diffuser	442,00

CUSTOMS AND OPTIONS

CANOPIES

Standard canopies are in matt white finish

	€ VAT EXCL.
MATT OR GLOSSY BLACK	+ 25,00
CHROME	+ 25,00
CUSTOM COLOR	+ 35,00

LONGER CABLES

Standard cables lenghts are indicated for every article

	€ VAT EXCL.
ANY ADDITIONAL METER OF ELECTRICAL CABLE AND STAINLESS STEEL CORD (1mt + 1 mt)	+ 20,00
ANY ADDITIONAL METER OF ELECTRICAL CABLE IN FABRIC	+ 25,00
ANY ADDITIONAL METER OF SINGLE CABLE FOR COMPOSITION (ex. GONG MINI CHAN, LANDING, ETC.)	+ 15,00

CUSTOM REQUEST

Charging for non-standard workmanship beyond the additional costs of the custom production

	€ VAT EXCL.
FIXED ADDITIONAL CHARGE FOR NON STANDARD ARTICLE (MODIFICATIONS NOT LISTED IN THE PRICE LIST)	NET COST + 25,00
MINIMUM ADDITIONAL CHARGE FOR CUSTOM COLOR (WHEREVER POSSIBLE AND UPON QUANTITY)	+ 50,00

WARRANTY EXTENSION

As per our standard sales and warranty terms

	€ VAT EXCL.
THREE YEARS GUARANTEE INSTEAD OF STANDARD TWO YEARS (per article)	NET COST +140,00
FOUR YEARS GUARANTEE INSTEAD OF STANDARD TWO YEARS (per article)	NET COST +250,00

GENERAL SALES CONDITIONS

1 - SPHERE OF APPLICATION: THE PRODUCT SUPPLY COMMERCIAL RELATIONS, THE PRODUCER PRANDINA S.R.L AND THE PURCHASER PARTIES ARE REGULATED BY THE FOLLOWING GENERAL SALES CONDITIONS. THESE SALES CONDITIONS WILL BE THE SPECIFIC SUBJECT AND EXPRESS REFERENCE BOTH IN THE ORDER THE PURCHASER SENDS TO THE PRODUCER PRANDINA SRL AND IN THE SUBSEQUENT ORDER CONFIRMATION BY PRANDINA SRL.

2 - ACCEPTANCE AND CONFIRMATION OF ORDERS: THE BASIS OF THE SALES CONTRACT IS THE WRITTEN ORDER CONFIRMATION BY PRANDINA SRL. IF THE ORDER IS ACCEPTED WITH FIXING OF THE SALES CONDITIONS, CONFIRMATION WILL BE SENT WITHIN 3 (THREE) WORKING DAYS FROM ASSIGNMENT OF THE ORDER. THE LACK OF ORDER CONFIRMATION CONSTITUTES NON-CONCLUSION OF THE CONTRACT.

3 - DELIVERY TIMES: THE DELIVERY TIMES ARE UNDERSTOOD TO BE FROM THE FACTORY OF PRANDINA SRL AND ARE ONLY APPROXIMATE. AN EXTENSION OF THE DELIVERY TIMES CAN BE CAUSED BY UNEXPECTED OR EXTRAORDINARY EVENTS, NOT DUE TO PRANDINA SRL, IN ITS FACTORY OR IN THAT OF THE FIRM'S SUPPLIERS. ORDERS SHALL BE EXECUTED ACCORDING TO THE AVAILABILITY OF STOCK AND SHIPMENTS CAN ALSO BE MADE PARTIALLY IN SEVERAL DELIVERIES. THE DELAY FOR PARTIAL DELIVERIES DOES NOT EXEMPT THE PURCHASER FROM THE CONTRACTUAL OBLIGATIONS AND DOES NOT GIVE RISE TO ANY SPECIAL RIGHT REGARDING DELIVERY OF THE REMAINING ORDERED QUANTITIES. THE DELIVERY TERM IS UNDERSTOOD TO BE FIXED ONLY WHEN EXPRESSLY CONFIRMED IN WRITING.

4 - RETURNS OF MATERIALS: GOODS RETURNED ON THE SOLE INITIATIVE OF THE PURCHASER ARE NOT ACCEPTED. RETURNS OF GOODS BY THE PURCHASER ARE IN ANY CASE SUBJECT TO THE PERMISSION OF PRANDINA SRL WHICH RESERVES THE RIGHT TO CHARGE POSSIBLE MANAGEMENT COSTS. PRANDINA SRL HAS THE RIGHT TO REFUSE ANY UNAUTHORIZED RETURN OF GOODS MADE TO ITS WAREHOUSES.

5 - INHERENT FAULTS AND MANUFACTURING DEFECTS: IN THE PRESENCE OF INHERENT FAULTS AND MANUFACTURING DEFECTS, WHENEVER THE PURCHASER HAS ACTED TOWARDS THE MANUFACTURER PRANDINA SRL, IN EXERCISING HIS ENTREPRENEURIAL OR PROFESSIONAL ACTIVITY, THE PURCHASER MUST CONTEST THE FAULT WITHIN 8 DAYS OF IT BEING DETECTED, IN ORDER TO TAKE ADVANTAGE OF THE RELEVANT WARRANTY. IN ANY CASE, THE ACTION BECOMES INVALID BY PRESCRIPTION AFTER ONE YEAR FROM DELIVERY. ON THE REPORTING OF MANUFACTURING DEFECTS AND FAULTS ACCORDING TO THE ABOVE MENTIONED PROCEDURES, THE FIRM PRANDINA SRL SHALL PROMPTLY ARRANGE TO REINSTATE THE GOODS BY REPLACING OR REPAIRING THE PRODUCT. IF IN THE SALES CONTRACT THE PURCHASER REPRESENTS THE END-CONSUMER OF THE PRODUCT SOLD AND HAS ACTED FOR PURPOSES EXTRANEOUS TO THE ENTREPRENEURIAL OR PROFESSIONAL ACTIVITY CARRI- ED ON, THE PARTICULAR REGULATION PROVIDED FOR UNDER THE HEADING "WARRANTY" GIVEN BELOW IN THE TEXT "WARRANTY" SHALL APPLY.

6 - LOSS AND DAMAGE DUE TO TRANSPORT: THE CARRIER CHARGED WITH TRANSPORT IS RESPONSIBLE FOR THE TOTAL OR PARTIAL LOSS, OR DAMAGE OF THE GOODS DUE TO TRANSPORT, SUBJECT TO PROOF THAT THE DAMAGE IS DUE TO FORTUITOUS EVENT OR INHERENT PACKING FAULTS. IF THE CARRIER ACCEPTED THE GOODS WITHOUT RESERVE, IT IS PRESUMED THAT THE GOODS DO NOT HAVE ANY APPARENT PACKING FAULTS. THEFT AND BURNING OF THE GOODS DOES NOT EXEMPT THE CARRIER FROM THE ABOVE MENTIONED RESPONSIBILITY, SUBJECT TO PROOF THAT SUCH EVENTS ARE EXCLUSIVELY DUE TO ACCIDENTAL CASE. FOR THE PURPOSES OF APPLICABILITY OF THE ABOVE MENTIONED WARRANTY, IT IS THE PURCHASER'S RESPONSIBILITY TO INFORM THE CARRIER THAT THE GOODS ARE ACCEPTED "WITH RESERVE", SIGNING THE TRANSPORT DOCUMENT IN RECEIPT WITH THE WORDING "CONTROL RESERVE" OR, IN ANY CASE, COMMUNICATING THE ABOVE MENTIONED RESERVE TO THE CARRIER. ACCEPTANCE WITHOUT RESERVE OF THE THINGS TRANSPORTED EXTINGUISHES THE WARRANTY ACTION, EXCEPT IN THE CASE OF FRAUD OR SERIOUS FAULT OF THE CARRIER. ACTION FOR FAULTINESS NON RECOGNIZABLE AT THE TIME OF DELIVERY IS POSSIBLE, PROVIDED THE DAMAGE IS REPORTED WITHIN 8 DAYS OF RECEIPT OF THE GOODS.

9 - APPLICABLE LAW. COMPETENT LAW-COURT: THE ABOVE MENTIONED SPECIFIC CLAUSES REGULATE THE GENERAL SALES CONDITIONS APPLICABLE TO SUPPLY RELATIONSHIPS OCCURRING BETWEEN PRANDINA SRL AND THE PURCHASERS. MOREOVER, FOR THOSE PARTIES NOT SPECIFICALLY REGULATED, THE REGULATIONS OF THE ITALIAN CIVIL CODE SHALL APPLY.
ANY DISPUTES SHALL BE SETTLED BY THE LAW-COURT OF VICENZA (VI).

WARRANTY

1 - SCOPE OF APPLICATION. DEFINITIONS: THE FOLLOWING REGULATION RELEVANT TO THE WARRANTY APPLIES FOR SALES MADE STARTING FROM 23 MARCH 2002, BY THE MANUFACTURER PRANDINA SRL TOWARDS END-CONSUMERS. IN COMPLIANCE WITH THE PROVISIONS INTRODUCED BY LEG. DECREE NO. 24 OF 2 FEBRUARY 2002 IN ENACTMENT OF EUROPEAN DIRECTIVE 1999/44/CE, "END-CONSUMERS" ARE DEEMED TO BE ANY INDIVIDUAL PERSONS WHO, IN THE SALES CONTRACT FOR THE CONSUMER GOODS PRODUCED BY THE FIRM PRANDINA SRL, OPERATE FOR PURPOSES EXTRANEOUS TO THE ENTREPRENEURIAL OR PROFESSIONAL ACTIVITY CARRIED ON.

2 - APPLICABLE REGULATION: THE FOLLOWING REGULATION REGULATES THE CONTRACTUAL CONDITIONS AND TERMS FOR EXERCISING THE WARRANTY ACTION BY END-CONSUMERS AND IS APPLICABLE IN ALL COUNTRIES IN WHICH THE PRODUCTS OF PRANDINA SRL ARE DISTRIBUTED. THE RIGHTS OF THE CONSUMER PROVIDED FOR BY THE ITALIAN LAW REGULATING THE SALE OF CONSUMER GOODS HOLD GOOD.

3 - GUARANTEE OF PRODUCT CONFORMITY: PRANDINA SRL GUARANTEES THE CONFORMITY AND SUITABILITY OF USE OF THE PRODUCT SOLD AND MAKES EVERY EFFORT TO MAINTAIN AS MUCH AS POSSIBLE THE QUALITY LEVEL OF ITS OWN PRODUCTION, EMPLOYING QUALITY MATERIALS AND COMPONENTS, CARRYING OUT CAREFUL SPECIALIZED WORK AND SUBJECTING ITS PRODUCTS TO ATTENTIVE CONTROLS. WITH CERTAIN PRODUCTS, IN WHICH ARTISAN-MANUFACTURED GLASS DIFFUSERS ARE USED, THERE MAY BE SLIGHT DIFFERENCES IN SHAPE AND COLOUR BETWEEN THE EXAMPLES. THESE VARIATIONS ARE NOT TO BE DEEMED AS FAULTS BUT INSTEAD THEY ATTEST THAT THE MATERIAL USED IS GENUINELY ARTISAN-MANUFACTURED GLASS. IN PARTICULAR, PRANDINA SRL PROVIDES EACH PRODUCT WITH INFORMATION FOR THE END-USER REGARDING THE PARTICULAR INSTALLATION, USE AND MAINTENANCE INSTRUCTIONS OR THE NEED TO CARRY OUT POSSIBLE CONTROLS ON THE PRODUCT. PRANDINA SRL LIKEWISE RESERVES THE RIGHT TO COMMUNICATE TO THE END-USER, BY MEANS OF DIRECT OR INDIRECT NOTICE, PARTICULAR INSTALLATION, USE AND MAINTENANCE INSTRUCTIONS OR THE NEED TO CARRY OUT POSSIBLE CONTROLS ON THE PRODUCT.

4 - WARRANTY ACTION: IN THE EVENT OF FAULTY PRODUCT, THE END-CONSUMER HAS THE RIGHT, ACCORDING TO THE TERMS AND PROCEDURES SPECIFIED IN ART 6. AND ART. 7, TO THE REPAIR OR REPLACEMENT, FREE OF CHARGE AND IN A REASONABLE TIME, OF THE PRODUCT OR THOSE PARTS OF THE PRODUCT DEEMED FAULTY IN MANUFACTURE OR UNUSABLE DUE TO FAULTS IN THE MATERIALS OR CONSTRUCTION, DETECTED AT THE TIME OF DELIVERY OF THE PRODUCT OR THAT APPEAR DURING THE 2 (TWO) YEARS COVERED BY THE WARRANTY.
WHENEVER THE REPAIR OR REPLACEMENT OF THE PRODUCT PROVES TO BE INAPPLICABLE, THE END-USER HAS THE RIGHT TO REQUEST A REFUND OF THE PURCHASE PRICE OF THE PRODUCT. A MINOR DEFECT CAN IN ANY CASE GIVE RISE TO A PARTIAL OR PROPORTIONATE REFUND OF THE PRICE. REPAIR OF THE PRODUCT PRECLUDES FURTHER EXTENSION OF THE WARRANTY AND COMPENSATION FOR ANY POSSIBLE DAMAGE TO PERSONS AND/OR THINGS DERIVING FROM USE OR FAULTINESS OF THE PRODUCT.

5 - TERMS FOR EXERCISING THE WARRANTY: PRANDINA SRL GUARANTEES THE PRODUCTS FOR (TWO) YEARS FROM THE DATE OF THEIR DELIVERY TO THE END-USER. THE END-USER HAS THE ONUS, UNDER PENALTY OF WARRANTY CANCELLATION, TO REPORT FAULTS IN THE PRODUCT WITHIN 2 (TWO) MONTHS FROM THEIR DETECTION. UNLESS PROVED OTHERWISE, THE FAULTS ARE PRESUMED, I.E. DEEMED TO EXIST SINCE DELIVERY, IF THEY ARE REPORTED WITHIN 6 (SIX) MONTHS FROM DELIVERY. DIRECT ACTION TO ASSERT THE FAULTS AND FOR REPORTING THE FAULT BECOMES INVALID BY PRESCRIPTION, IN ANY CASE, IN THE TERM OF 26 (TWENTY-SIX) DAYS FROM DELIVERY OF THE PRODUCT.

6 - OBLIGATIONS FOR PRESERVING THE WARRANTY: PRANDINA SRL SHALL REPAIR OR REPLACE ITS PRODUCTS IF THESE ARE RETURNED BY THE RESELLER CARRIAGE FREE, POSSIBLY WITH THE ORIGINAL PACKING, ALONG WITH A FISCAL DOCUMENT (RECEIPT, INVOICE, PURCHASE RECEIPT) PROVING THE DATE THE PRODUCT WAS PURCHASED. THE END-CONSUMER HAS THE OBLIGATION TO:
•CAREFULLY KEEP THE FISCAL DOCUMENT PROVING PURCHASE OF THE APPLIANCE
•REPORT TO THE RESELLER, WHERE THE PURCHASE WAS MADE, THE EXACT NATURE OF THE FAULT AND CONSIGN THE FAULTY PRODUCT, IF POSSIBLE WITH THE ORIGINAL PACKING, TOGETHER WITH A COPY OF THE FISCAL DOCUMENT PROVING PURCHASE OF THE PRODUCT.

7 - WARRANTY ACTION LIMITS: IN ACCORDANCE WITH LEG. DECREE 24/2002, ART. 1519-TER, THERE IS NO DEFECT IN CONFORMITY IF, AT THE TIME OF CONCLUSION OF THE CONTRACT, THE DEFECT WAS KNOWN OR KNOWABLE WITH ORDINARY DILIGENCE OR IF THE DEFECT IN CONFORMITY IS DUE TO THE CONSUMER. ALSO, THE WARRANTY DOES NOT COVER THOSE PARTS INVOLVING NORMAL WEAR OR INTERVENTIONS OF ROUTINE ADMINISTRATION, THE LAMPS, THE DAMAGE AND COMPLETE OR PARTIAL BREAKAGE OF THE APPLIANCE DUE TO TRANSPORT, DERIVING FROM TAMPERING, REPAIRS CARRIED OUT BY UNAUTHORIZED THIRD PARTIES, FAULTY ASSEMBLY OR IMPROPER USE AND MAINTENANCE, DAMAGE AND BREAKDOWN OF THE APPLIANCES CAUSED BY OVERLOADS AND ANOMALOUS POWER SUPPLY VOLTAGES OR DUE TO EXTERNAL CHEMICAL AND PHYSICAL INFLUENCES NOT ENVISAGED.

PROTECTION OF THE TRADEMARK
© ® PRANDINA SRL. ALL RIGHTS RESERVED.
THE LOGO PRANDINA ® IS A REGULARLY REGISTERED TRADEMARK IN THE NATIONAL AND INTERNATIONAL CONTEXT AND IS THE EXCLUSIVE PROPERTY OF PRANDINA SRL. USE OF SAID LOGO FOR COMMERCIAL PURPOSE, WITHOUT THE PRIOR WRITTEN PERMISSION OF PRANDINA SRL, CAN CONSTITUTE INFRINGEMENT OF TRADEMARK AND UNFAIR COMPETITION IN BREACH OF THE STATE LAWS.